Differential pressure switches for gas, air, flue and exhaust gases

GGW…A4
GGW…A4-U
GGW…A4/2
GGW…A4-U/2

5.03

DUNGS®
Combustion Controls

Technical description

The differential pressure switch GGW…A4 is an adjustable gas-differential pressure switch as per EN 1854 for automatic burner controls. It is suitable for switching a circuit on, off or over on changes in actual pressure value relative to the set reference value. The reference value (switching point) is adjusted on a setting wheel provided with a scale. The test nipple is integrated in metal housing as standard.

Applications

Differential pressure switch in furnace, ventilation, and air conditioning applications. Differential pressure switch: Suitable for employment with gas family 1, 2, 3, and other, neutral, gaseous media as well as air, smoke and exhaust gases. It does not contain any non-ferrous metals, suitable for gases of up to max. 0.1 vol % H_2S, dry.

Certifications

EC type test approval as per EC Gas Applicance Directive:

GGW…A4… CE-0085 AO 3220

EC type test approval as per EC Pressure Equipment Directive:

GGW…A4… CE0036

Pressure switches class "S" as per EN 1854.

Approvals in other important gas-consuming countries.

Printed in Germany • Rösler Druck • Edition 02.10 • Nr. 215 168

Function
Differential pressure switch operating in the over- and under-pressure ranges. The differential pressure acts on the membrane, pressing it against the force of the adjusting spring and against the microswitch. The pressure switch operates without outside power.

Differential pressure switch GGW…A4 and GGW…A4-U
The switching apparatus reacts to the difference in pressure between the two pressure chambers [G 1/4 (+) <-> G 1/8 (-)] and, if the pressure exceeds or drops below the setpoint, activates or switches an electrical circuit.

Unit selection
If the lower pressure is [G 1/8 (-)] and excess pressure with respect to the atmosphere exists type GGW…A4 must be employed.
If the lower pressure is [G 1/8 (-)], and lower pressure with respect to the atmosphere exists type GGW…A4-U must be employed.

Overpressure switch GGW...A4
Pressure connection G 1/4 (+)
Single-acting pressure switch in the overpressure range.
The switching mechanism responds if there is an overpressure which switches on, off or over to an electric circuit if the set reference value is exceeded or undershot.
The pressure connetion G 1/8 may not be closed.

Low pressure switch GGW...A4-U
Pressure connection G 1/8
Single-acting pressure switch in the overpressure range.
The switching mechanism responds if there is a low pressure which switches on, off or over to an electric circuit if the set reference value is exceeded or undershot.
The pressure connetion G 1/4 may not be closed.

Switching function

As pressure rises:
1 NC opens, 2 NO closes.
As pressure falls:
1 NC closes, 2 NO opens.

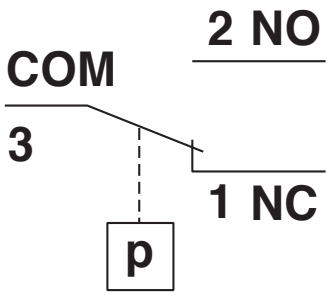

Definition of switching difference Δp
The switching difference Δp is the pressure difference between the upper and lower switching pressures.

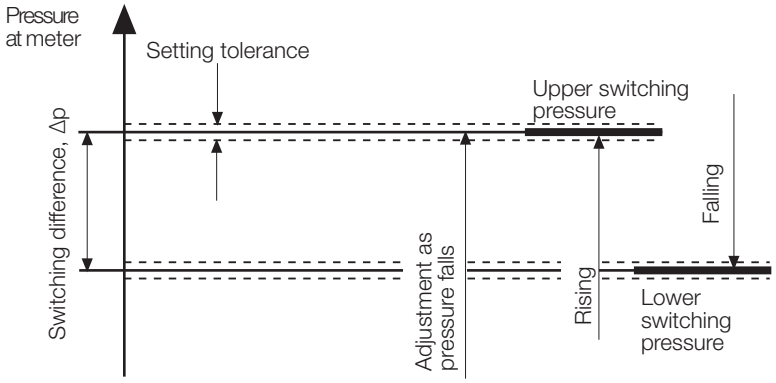

GGW…A4, Design: Clear cover
Protection class: IP 54

IP 54

5 Protection against ingress of solid particles ø ≥ 1 mm.
Protection against access to hazardous parts using ø ≥ 1 mm wire
Complete contact protection

4 Protection against a water jet.
No hazardous conditions may result.

GGW…A4/2, Design: Metal housing
Protection class: IP 65

IP 65

6 Protection against the entry of dust (dust sealed).
Protection against access to hazardous parts using ø ≥ 1 mm wire
Complete contact protection

5 Protection against a water jet from a nozzle directed at the unit (housing) from any directions
No hazardous conditions may result (water jet).

Technical specifications

Max. operating pressure	GGW 3 A4 - GGW 150 A4 500 mbar (50 kPa) GGW 3 A4/2 - GGW 150 A4/2 500 mbar (50 kPa) GGW 3 A4-U - GGW 150 A4-U -500 mbar (-50 kPa) GGW 3 A4-U/2 - GGW 150 A4-U/2 -500 mbar (-50 kPa)		
Pressure connection	P+: In the center of the underside of the housing, G 1/4 internal thread in accord. with ISO 228: **Gas or air.** P+: On the side of the housing with closure screw, G 1/4: **Gas or air** P-: On the side of the underside of the housing, G 1/8 internal thread in accord. with ISO 228: **Gas or air.**		
Metering connection	Metering connection tube integrated into the metal housing, ø 9		
Temperature range	Ambient temperature	-15 °C to +70 °C	
	Medium temperature	-15 °C to +70 °C	
	Storage temperature	-30 °C to +80 °C	
Materials	**GGW…A4**		
	Housing base	aluminium die casting	
	Cover	Polycarbonate	
	Switch portion	Polycarbonate	
	Membrane	NBR	
	Switch contact	Ag gold-plated (Au) suitable for DDC applications: 24 VDC; 0.01 A	
	GGW…A4/2		
	Housing base	aluminium die casting	
	Cover	Zinc diecast, powder-coated	
	Switch portion	Polycarbonate	
	Membrane	NBR	
	Switch contact	Ag gold-plated (Au) suitable for DDC applications: 24 VDC; 0.01 A	
Switching voltage	DC	min. 5 V	max. 24 V
	(AC eff.	min. 24 V	max. 250 V)
	(DC	min. 24 V	max. 48 V)
Nominal current	DC	20 mA	
	(AC eff.	10 A)	
Switching current	DC	min. 5 mA	max. 20 mA
	(AC eff.	min. 20 mA	max. 6 A cos φ 1)
	(AC eff.	min. 20 mA	max. 3 A cos φ 0,6)
	(DC	min. 20 mA	max. 1 A)
Electrical connection	Standard	at screw terminals via cable gland, M20 x 1,5	
	Special design	plug connection for line sockets as per DIN EN 175 301-803, 3-pin with protection contact	
Degree of protection	GGW…A4	IP 54 in accord. with IEC 529 (EN 60529), (clear cover).	
	GGW…A4/2	IP 65 in accord. with IEC 529 (EN 60529), (metal housing).	
Adjustment	With rising pressure and installed in a vertical position.Optional rising or dropping pressure adjustment on-site possible. Note switch point change if installation position changes.		
Adjustment tolerance	± 15% switch point deviation based on the setpoint and with unit installed in a vertical position		

Dimensions [mm]
GGW…A4
GGW…A4-U

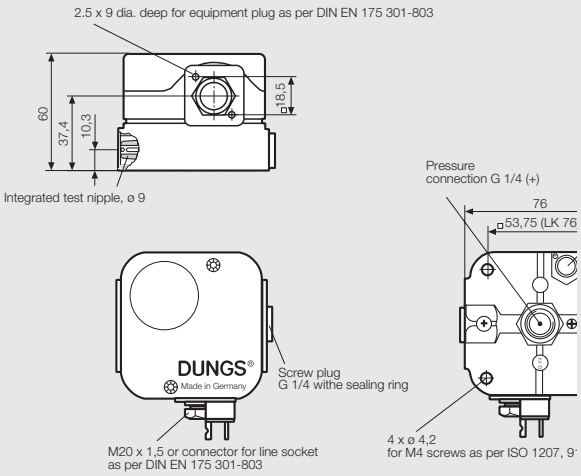

GGW… / …A4

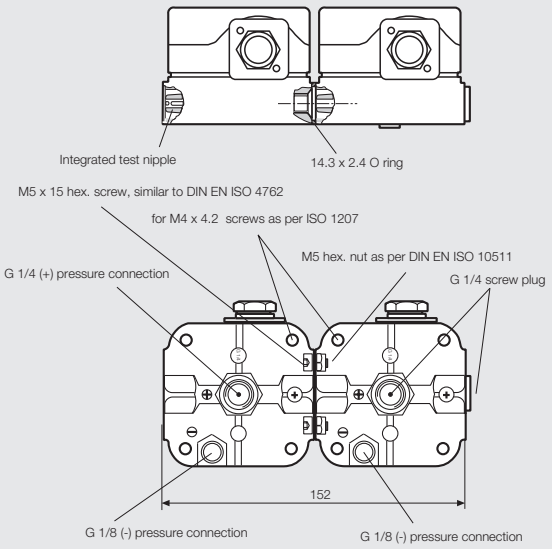

GGW…A4/2
with metal housing,
cable gland M 20 x 1.5

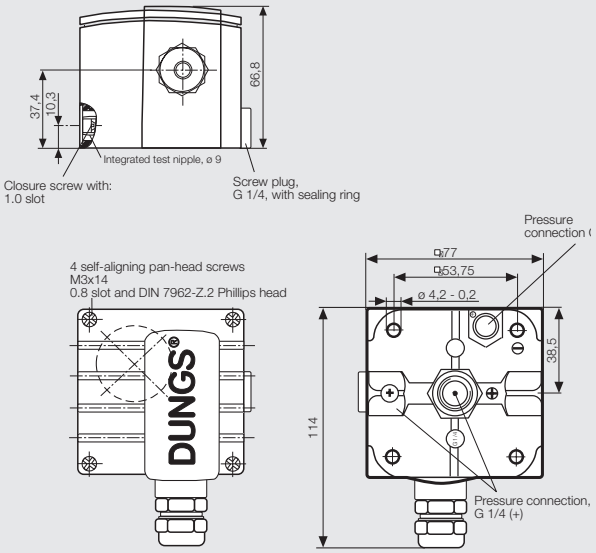

Installation position

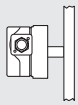

Standard installation position

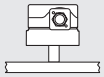

When installed horizontally, the pressure switch switches at a pressure higher by approx. 0.5 mbar

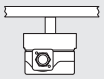

When installed horizontally overhead, the pressure switch switches at a pressure lower by approx. 0.5 mbar

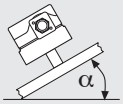

When installed in an intermediate installation position, the pressure switch switches at pressure deviating from the set reference value by max. ± 0.5 mbar.

Designation

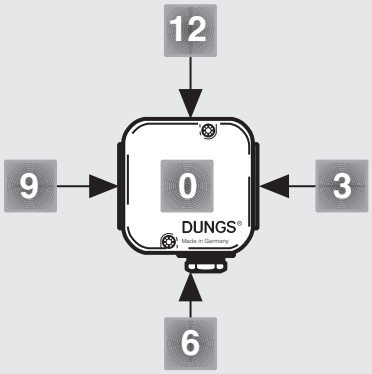

GGW 150 A4 [Au-M-MS9-V0-VS3]

Pressure connection
V0 Pressure connection G 1/4 position 0
V3 Pressure connection G 1/4 position 3

screw plug
VS0 screw plug at position 0
VS3 screw plug at position 3

Test nipple
MS3 Test nipple at position 3
MS9 Test nipple at position 9
M9 Test nipple, open position 9

Electrical connection
M M20 x 1.5 cable gland (standard)
G3 Device connector

Contact material
Au Gold plated silver

Adjustment ranges [mbar]
0,4 - 3
1 - 10
2,5 - 50
30 - 150

Pressure switch design
GGW A4 Clear cover PC, (IP54) Differential pressure switches when the pressure exceeds or drops below the adjusted setpoint (positive pressure).
GGW A4/2 Metal housing powder-coated, (IP 65) Differential pressure switches when the pressure exceeds or drops below the adjusted setpoint (positive pressure).
GGW A4-U Clear cover PC, (IP54) Differential pressure switches when the pressure exceeds or drops below the adjusted setpoint (negative pressure).
GGW A4-U/2 Metal housing powder-coated, (IP 65) Differential pressure switches when the pressure exceeds or drops below the adjusted setpoint (negative pressure).

Ordering example

Pressure switch design
Differential pressure switch GGW A4
Adjustment range
30 – 150 mbar
Contact material
Au
Electrical connection
Cable gland M20 x 1,5
Metering connection
MS 9
Pressure connection G1/4
V0-VS3: at position 0 and position 3 with screw plug

GGW 150 A4 [Au-M-MS9-V0-VS3]

Accessories for pressure switch GGW A4	Order No.
Kit: G3 equipment plug, 3-pin + E	219 659
Line sockets, 3-pin + E grey GDMW	210 318
G 1/4 test nipple and seal ring (5 x)	230 398
G 1/4 screw plug and seal ring (5 x)	230 396
Double pressure switch mounting kit (not for /2-version)	213 910
Metal mounting bracket	230 288
Mounting kit glowlamp, 230 V yellow	231 773
Mounting kit glowlamp, 120 V yellow	231 772
Mounting kit display-LED, 24 V yellow	231 774
Mounting kit glowlamp, 230 V green	248 239
Mounting kit display-LED, 24 V green	248 240

Differential pressure switches for gas, air, flue and exhaust gases

GGW…A4
GGW…A4-U
GGW…A4/2
GGW…A4-U/2

DUNGS®
Combustion Controls

Technical data 1 mbar = 100 Pa = 0,1 kPa ≈ 10 mm WS 1 Pa = 0,01 mbar ≈ 0,1 mm WS

Model	Version [Au-M-MS9-V0-VS3]	Order number	Setting range [mbar]	Degree of protection	Differential pressure switch Δp [mbar]
GGW…A4	GGW 3 A4	248 673	0,4 - 3	IP 54	≤ 0,3
Differential	GGW 10 A4	248 276	1 - 10	IP 54	≤ 0,5
pressure switch	GGW 50 A4	246 176	2,5 - 50	IP 54	≤ 1
(positive pressure)	GGW 150 A4	248 295	30 - 150	IP 54	≤ 3
GGW…A4-U	GGW 3 A4-U	248 327	-0,4 - -3	IP 54	≤ 0,3
Differential	GGW 10 A4-U	240 358	-1 - -10	IP 54	≤ 0,5
pressure switch	GGW 50 A4-U	246 178	-2,5 - -50	IP 54	≤ 1
(negative pressure)	GGW 150 A4-U	247 980	-30 - -150	IP 54	≤ 3

Supplied in separate packaging

Model	Version [Au-M-MS9-V0-VS3]	Order number	Setting range [mbar]	Degree of protection	Differential pressure switch Δp [mbar]
GGW…A4/2	GGW 3 A4/2	248 686	0,4 - 3	IP 65	≤ 0,3
Differential	GGW 10 A4/2	248 687	1 - 10	IP 65	≤ 0,5
pressure switch	GGW 50 A4/2	248 688	2,5 - 50	IP 65	≤ 1
(positive pressure)	GGW 150 A4/2	248 689	30 - 150	IP 65	≤ 3
GGW…A4-U/2	GGW 3 A4-U/2	248 690	-0,4 - -3	IP 65	≤ 0,3
Differential	GGW 10 A4-U/2	248 691	-1 - -10	IP 65	≤ 0,5
pressure switch	GGW 50 A4-U/2	248 692	-2,5 - -50	IP 65	≤ 1
(negative pressure)	GGW 150 A4-U/2	248 693	-30 - -150	IP 65	≤ 3

Supplied in separate packaging

We reserve the right to make any changes in the interest of technical progress.

Head Offices and Factory
Karl Dungs GmbH & Co. KG
Siemensstraße 6-10
D-73660 Urbach, Germany
Telefon +49 (0)7181-804-0
Telefax +49 (0)7181-804-166

Postal address
Karl Dungs GmbH & Co. KG
Postfach 12 29
D-73602 Schorndorf, Germany
e-mail info@dungs.com
Internet www.dungs.com

Gtksnab
Оборудование для жизни

Мы ценим каждого клиента и предлагаем широкий ассортимент продукции. Оборудование соответствует всем директивам безопасности и имеет необходимые лицензии. Быстрая доставка по всей России и СНГ. Самовывоз со склада в Москве. Квалифицированные специалисты всегда готовы проконсультировать и помочь подобрать нужные запчасти. Доверьтесь нашему многолетнему опыту и надежности поставок! Интернет-магазин "Gtksnab".

Остались вопросы?
Нужно подобрать или заказать деталь?

Email
order@gtksnab.ru

Телефон
+7 (495)131-57-49

Whatsapp
+7(985) 991-80-53

Telegram
@gtksnab

Сайт
gtksnab.ru