Pressure limiter
ÜB…A4 and NB…A4

5.06

DUNGS®
Combustion Controls

Technical description

The pressure limiters ÜB…A4 and NB…A4 are adjustable pressure switches as per EN 1854 for automatic burner controls.
They are suitable for switching a circuit on, off or over on changes in actual pressure value relative to the set reference value.
The reference value (switching point) is adjusted on a setting wheel provided with a scale. Test nipple integrated in metal housing as standard.

Application

Pressure monitoring in firing, ventilation and air-conditioning systems.
Suitable for gases of families 1,2,3 and other neutral gaseous media.

Approvals

EC type test approval as per EC Gas Appliance Directive:

ÜB...A4	CE-0085 AO 3220
NB...A4	CE-0085 AO 3220

EC type test approval as per EC Pressure Equipment Directive:

ÜB...A4	CE0036
NB...A4	CE0036

Approvals in other important gas-consuming countries. Special designs for the North American market with U_L, FM and CSA registrations.

Printed in Germany • Edition 02.10 • Nr. 214 747

Functional description
Single-acting pressure limiter in pressure range.
The pressure limiters work without using any auxiliary power.

ÜB…A4, NB…A4 pressure limiters
The control unit responds to pressure. Interlock is performed when the set reference value is exceeded or undershot.

The "Locked" switching state is indicated by a glow lamp.
Restart is only possible by activating the reset button on the setting wheel of the pressure limiter after the operating pressure is attained.

ÜB…A4: Switches and locks when the set pressure is exceeded.
NB…A4: Switches and locks when the set pressure is undershot.

ÜB…A4 switching function

As pressure rises
2 NO closes, 1 NC opens
Glow lamp ON, locked.

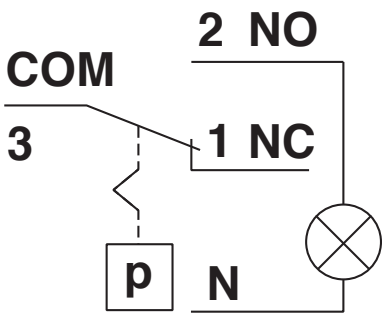

NB…A4 switching function

As pressure falls
2 NO opens, 1 NC closes
Glow lamp ON, locked.

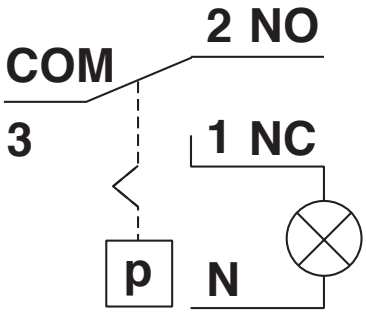

Operating state

Specifications

Max. operating pressure	NB, ÜB 50-150 A4 NB, ÜB 500 A4	500 mbar (50 kPa) 600 mbar (60 kPa)
Pressure connection	Standard: Optional:	G 1/4 female thread on centre of housing underside as per ISO 228 additionally G 1/4 female thread on opposite measuring connection side
Measuring connection	Test nipple integrated in metal housing, ø 9	
Temperature range	Ambient temperature Medium temperature Storage temperature	-15 °C to +70 °C -15 °C to +70 °C -30 °C to +80 °C
Materials	Housing Switch Diaphragms Switching contact	aluminium die casting polycarbonate NBR Agr
Switching voltage	AC eff. min. 10 V DC min. 12 V	max. 250 V max. 48 V
Nominal current	AC eff. 10 A	
Switching current	AC eff. min. 20 mA AC eff. min. 20 mA DC min. 20 mA	max. 6 A at cos φ 1 max. 3 A at cos φ 0,6 max. 1 A
Electrical connection	Standard: Special design:	at screw terminals via PG11 cable gland plug connection for line sockets as per DIN EN 175 301-803, 3-pin with protective contact
Degree of protection	IP 54 as per IEC 529 (EN 60529)	
Adjustment	In a vertical position NB…A4: As pressure falls ÜB…A4: As pressure rises If installation position deviates, note change in switching point	
Setting tolerance	±15% switching point deviation based on the setpoint and with unit installed in a vertical position	

Dimensions [mm]

ÜB … A4, NB … A4

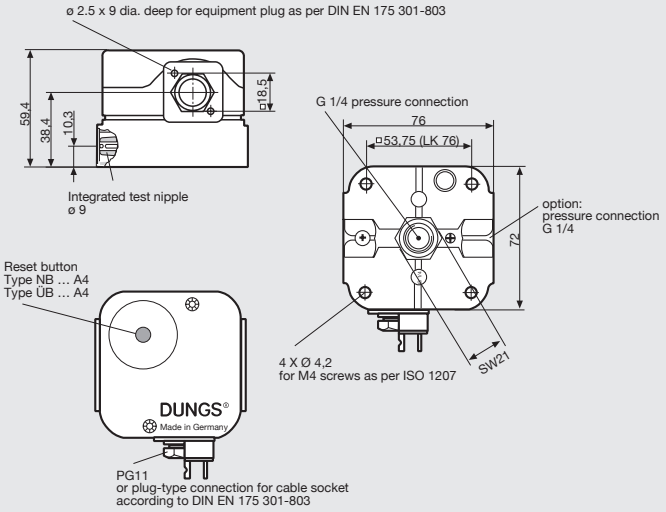

ÜB, NB … A4/ÜB, NB … A4

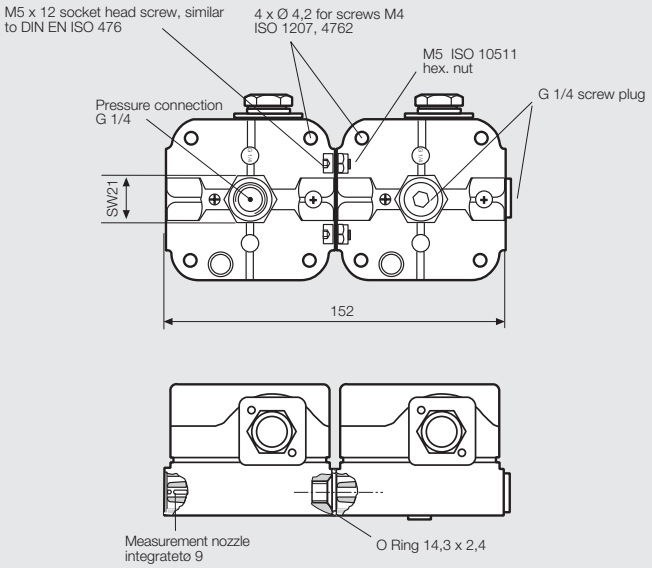

SW = Wrench width

Installation position

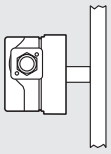

Standard installation position

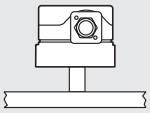

When installed horizontally, the pressure switch switches at a pressure higher by approx. 0.5 mbar.

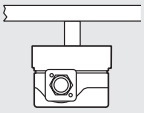

When installed horizontally overhead, the pressure switch switches at a pressure lower by approx. 0.5 mbar.

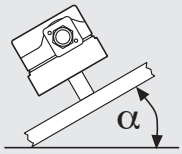

When installed in an intermediate installation position, the pressure switch switches at pressure deviating from the set reference value by max. ± 0.5 mbar.

Designation

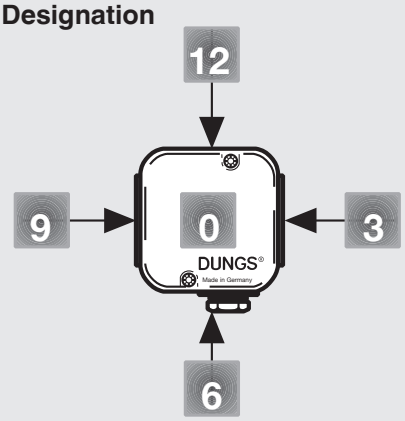

ÜB 150 A4 [Ag-PG-MS9-V0-VS3]

Pressure connection
V0 Pressure connection G 1/4 Position 0
V3 Pressure connection G 1/4 Position 3

Screw plug
VS0 Screw plug at position 0
VS3 Screw plug at position 3

Instrument gland
MS3 Test nipple at position 3
MS9 Test nipple at position 9

Electrical connection
PG PG11 cable gland
G3 Equipment plug, 3 pin + E

Contact material
Ag

Setting ranges (mbar)

		NB	ÜB
50	2.5 - 50	X	X
150	30 - 150	X	X
500	50 - 500	X	X

Pressure switch design
ÜB ... A4 Pressure limiter switches and locks if set reference value is exceeded.
NB ... A4 Pressure limiter switches and locks if set reference value is undershot.

Order example

Pressure switch design
ÜB pressure limiter
Setting range
30 - 150 mbar
Contact material
Ag
Electrical connection
Cable gland PG11
Test nipple
MS 9
Pressure connection G1/4
V0-VS3: an Position 0 and Position 3 with screw plug

ÜB 150 A4 [Ag-PG-MS9-V0-VS3]

Accessories for pressure switches NB…A4, ÜB…A4	Order No.
Kit: G3 equipment plug, 3-pin + E, NB/ÜB A2/A4	227 644
Glow lamp with series resistor (50 x) 230 V AC (spare part requirement NB, ÜB)	231 766
Glow lamp with series resistor (50 x) 120 V AC (spare part requirement NB, ÜB)	231 768
Signal lamp 24 V AC/DC (50 x)	231 771
Line socket, 3-pin + E grey GDMW	210 318
G 1/4 test nipple and seal ring (5 x)	230 398
G 1/4 screw plug and seal ring (5 x)	230 396
Metal mounting bracket	230 288
Mounting Kit Double Pressure Switch	213 910

DUNGS®
Combustion Controls

Technical data 1 mbar = 100 Pa = 0.1 kPa ≈ 10 mm WS 1 Pa = 0.01 mbar ≈ 0.1 mm WS

Type	Version [Ag-PG-MS9-V0] Glow lamp ~ (AC) 230 V	Order No.	Setting range [mbar]		Switching difference Δp [mbar]
ÜB…A4 pressure limiter	ÜB 50 A4	210 537	2.5 - 50	↑	--
	ÜB 150 A4	138 630	30 - 150		--
	ÜB 500 A4	210 970	50 - 500		--
NB…A4 pressure limiter	NB 50 A4	210 534	2.5 - 50	↓	--
	NB 150 A4	210 931	30 - 150		--
	NB 500 A4	210 971	50 - 500		--

We reserve the right to make any changes in the interest of technical progress.

Head Offices and Factory
Karl Dungs GmbH & Co. KG
Siemensstraße 6-10
D-73660 Urbach, Germany
Telephone +49 (0)7181-804-0
Fax +49 (0)7181-804-166

Postal address
Karl Dungs GmbH & Co. KG
Postfach 12 29
D-73602 Schorndorf, Germany
e-mail info@dungs.com
Internet www.dungs.com

Gtksnab
Оборудование для жизни

Мы ценим каждого клиента и предлагаем широкий ассортимент продукции. Оборудование соответствует всем директивам безопасности и имеет необходимые лицензии. Быстрая доставка по всей России и СНГ. Самовывоз со склада в Москве. Квалифицированные специалисты всегда готовы проконсультировать и помочь подобрать нужные запчасти. Доверьтесь нашему многолетнему опыту и надежности поставок! Интернет-магазин "Gtksnab".

Остались вопросы?
Нужно подобрать или заказать деталь?

Email
order@gtksnab.ru

Телефон
+7 (495)131-57-49

Whatsapp
+7(985) 991-80-53

Telegram
@gtksnab

Сайт
gtksnab.ru