SIEMENS

# 7808

ISO 9001

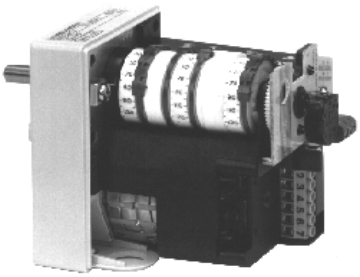

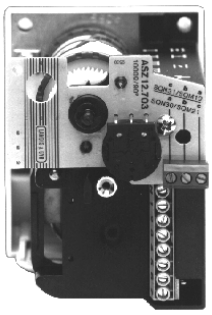

Version with integrated potentiometer

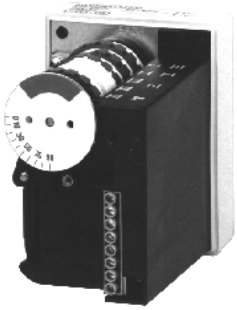

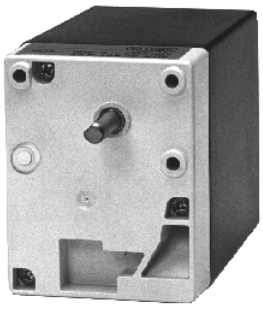

Basic version

# Actuators

# SQN3...
# SQN4...

supplementary Data Sheet 7921 «Potentiometers ASZ...»

**Electromotoric actuators for air dampers or for fuel / air ratio control with oil or gas burners of small to medium capacity.**

- **Versions for integrating a potentiometer**
- **Running times from 4.5 to 120 seconds**
- **All versions feature:**
  - **Auxiliary switches and integrated relays (optional)**
  - **Geartrains which can be disengaged**
  - **Internal and external position indication**
  - **Easily adjustable end and auxiliary switches**

**The SQN3... / SQN4... and this Data Sheet are intended for use by OEMs which integrate the actuators in their products!**

## Use

| | | |
|---|---|---|
| SQN30... | Counterclockwise | Up to 3 Nm |
| SQN31... | Clockwise | Up to 3 Nm |
| SQN41... | Clockwise | Up to 6 Nm |

The actuators are used primarily for controlling the amount of combustion air:
- Load-dependent in connection with P-PI or PID controllers, such as the RWF40...
- Directly with the help of the different types of burner controls, such as the LOA..., LMO..., LMG... or LFL...

## Warning notes

**To avoid injury to persons, damage to property or the environment, the following warning notes should be observed!**

**Do not interfere with or modify the actuators!**

- Before performing any wiring changes in the connection area of the actuators, completely isolate the equipment from the mains supply (all-polar disconnection)
- Ensure protection against electric shock hazard by providing adequate protection for the connection terminals and by securing the housing cover
- Check wiring and all safety functions prior to commissioning and each time a fuse has been changed
- Fall or shock can adversely affect the safety functions. Such actuators may not be put into operation, even if they do not exhibit any damage

## Mounting notes

- Ensure that the relevant national safety regulations are complied with

## Installation notes

- Installation work must be carried out by qualified staff

## Commissioning notes

- Commissioning and maintenance work must be carried out by qualified staff

## Service notes

- If a potentiometer is subsequently fitted, the user must change the type reference of the actuator as described in section «Mechanical design» using a permanent felt-tip pen
- Check wiring and all safety functions each time an actuator has been replaced

## Norms and standards

CE conformity according to the directives of the European Union

| | |
|---|---|
| - Electromagnetic compatibility EMC (immunity) | 89 / 336 EEC |
| - Low-voltage directive | 73 / 23 EEC |

## Disposal notes

The actuator contains electrical and electronic components and may not be disposed of together with household garbage.
Local and currently valid legislation must be observed.

## Mechanical design

| | |
|---|---|
| Housing | - Made of impact-proof and heat-resistant plastic<br>- Accommodating:<br>– The reversible synchronous motor with the geartrain, which can be **disengaged**<br>– The camshaft of the control section<br>– The relays (depending on the type of actuator)<br>– The switches which, via a printed circuit board, are connected to the terminals |
| Drive motor | Scales beside the cams facilitate adjustment of the switching points.<br>An additional scale at the end of the camshaft serves for internal position indication.<br><br>A potentiometer, which can subsequently be integrated, delivers an electrical signal which gives the position of the drive shaft (with the types of actuators prepared for fitting a potentiometer).<br><br>A disk with a groove is attached to the head of the camshaft or to the potentiometer, thus making visible the position of the actuator's drive shaft from outside (refer to photos on the front page).<br>The actuator has 2 openings for cable entry glands Pg9 and Pg11. |
| Type of motor | - Reversible and locking-proof synchronous motor |
| Coupling | - Drive shaft can be manually disengaged from geartrain and motor<br>- Automatic reengagement |
| Adjustment of switching points | - By means of adjustable cams<br>- Scales beside the cams indicate the angle of the switching point |
| Position indication | - Internally:<br>Scale at the beginning of the camshaft on the geartrain side |
| Electrical connections | - Screw terminals |
| Geartrain | - Maintenance-free |
| Drive shaft | - Made of black-finished steel.<br>- Ready fitted to the front of the geartrain<br>- Different versions available |
| Mounting and fixing | - Front of geartrain is used as the mounting surface<br>- Actuator is secured via through-holes |
| ASZ...7... | - Coiled rotary type potentiometers<br>- Resistance track and wiper are accommodated in a dust-proof casing |
| ASZ...8... | - Conductive plastic potentiometers |

Fitting the potentiometer

Certain types of actuators are supplied ready prepared for fitting a potentiometer. These actuators differ from the basic version **only in that the housing is higher** and that they are prepared for accepting a potentiometer. Accessories are not required.

The required **potentiometer is to be ordered as a separate item** (refer to «Accessories»).

In that case, the third digit after the dot in the actuator's type reference will change from «1» to «2».

Example:
SQN31.11**1**A2700 → basic version
SQN31.11**2**A2700 → version for fitting a potentiometer

Conversion by the user

Users have the choice of converting a basic version to a version for fitting a potentiometer. For that purpose, a **conversion kit AGA32** is available (refer to «Accessories» and «Example» under «Ordering»).

Conversion of the type reference must be made with a permanent felt-tip pen (important for service work).

## Type code

**Do not use** this type code for ordering. It only serves as a general guide for creating type references.

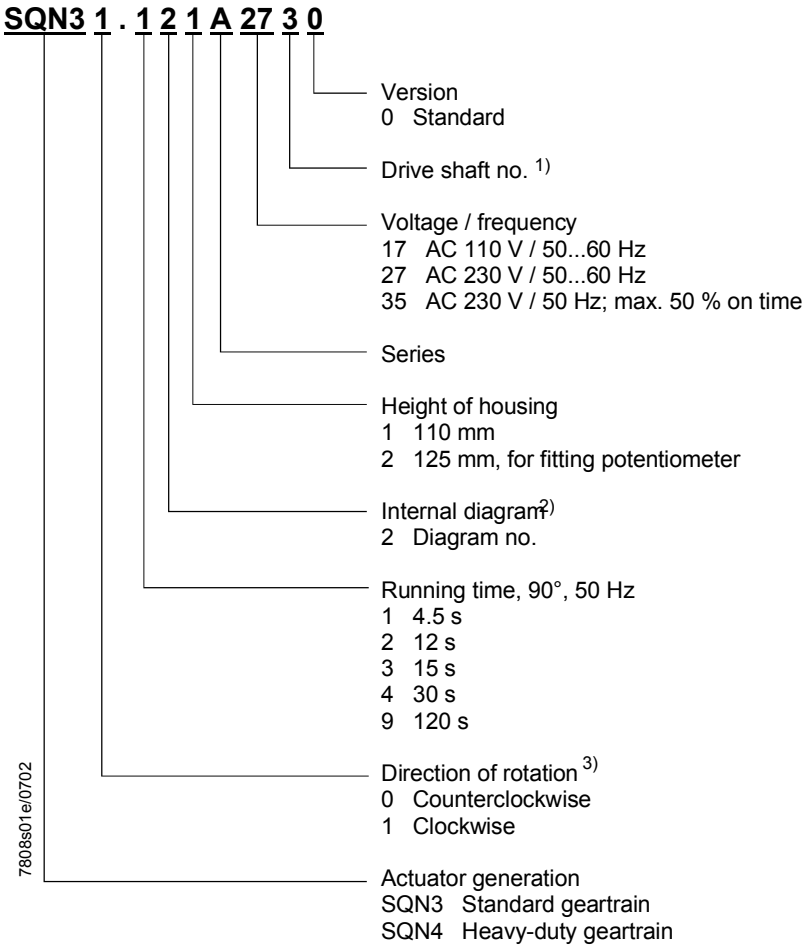


¹) Refer to «Dimensions» ²) Refer to «Connection diagrams» ³) When facing the drive shaft

## Type summary

### Actuators SQN30... / basic versions – not suited for fitting a potentiometer (other types on request)

| Diagram no. | Drive shaft [1] no. | Direction of rotation [7] | Running time at 50 Hz [2] for 90° | Operating torque (max.) Nm | Holding torque Nm | Relay [9] Pcs. | AS [10] Pcs. | AC 220 V -15 % AC 240 V +10 % 50...60 Hz Type reference [5] | AC 100 V -15 % AC 110 V +10 % 50...60 Hz Type reference [5] |
|---|---|---|---|---|---|---|---|---|---|
| 1 | 0 | [11] | 4.5 | 1 | 0.8 | 1 | 2 | **SQN30.111A2700** | SQN30.111A1700 |
| 1 | 0 | [11] | 4.5 | 1.5 | 0.8 | 1 | 2 | **SQN30.111A3500** [3] | |
| 2 [6] | 0 | [11] | 4.5 | 1 | 0.8 | 2 | 1 [4] | SQN30.121A2700 | SQN30.121A1700 |
| 2 [6] | 0 | [11] | 4.5 | 1.5 | 0.8 | 2 | 1 [4] | **SQN30.121A3500** [3] | |
| 3 | 0 | [11] | 4.5 | 1 | 0.8 | 2 | 1 [4] | SQN30.131A2700 | SQN30.131A1700 |
| 5 | 0 | [11] | 4.5 | 1 | 0.8 | 2 | 1 [4] | **SQN30.151A2700** | SQN30.151A1700 |
| 5 | 0 | [11] | 12 | 1.8 | 1.8 | 2 | 1 [4] | **SQN30.251A2700** | SQN30.251A1700 |
| 0 | 0 | [11] | 30 | 3 | 3 | --- | 3 | **SQN30.401A2700** | |
| 0 | 3 | [11] | 30 | 3 | 3 | --- | 3 | **SQN30.401A2730** | |
| 3 | 0 | [11] | 30 | 3 | 3 | 2 | 1 [4] | **SQN30.431A2700** | |
| 5 | 0 | [11] | 30 | 3 | 3 | 2 | 1 [4] | **SQN30.451A2700** | |

### Actuators SQN31... / basic versions – not suited for fitting a potentiometer (other types on request)

| Diagram no. | Drive shaft [1] no. | Direction of rotation [7] | Running time at 50 Hz [2] for 90° | Operating torque (max.) Nm | Holding torque Nm | Relay [9] Pcs. | AS [10] Pcs. | AC 220 V -15 % AC 240 V +10 % 50...60 Hz Type reference [5] | AC 100 V -15 % AC 110 V +10 % 50...60 Hz Type reference [5] |
|---|---|---|---|---|---|---|---|---|---|
| 0 | 0 | Clockwise | 4.5 | 1 | 0.8 | --- | 3 | **SQN31.101A2700** | SQN31.101A1700 |
| 1 | 0 | Clockwise | 4.5 | 1 | 0.8 | 1 | 2 | **SQN31.111A2700** | |
| 1 | 6 | Clockwise | 4.5 | 1 | 0.8 | 1 | 2 | **SQN31.111A2760** | |
| 2 [6] | 0 | Clockwise | 4.5 | 1 | 0.8 | 2 | 1 [4] | SQN31.121A2700 | |
| 2 [6] | 3 | Clockwise | 4.5 | 1 | 0.8 | 2 | 1 [4] | **SQN31.121A2730** | |
| 2 [6] | 6 | Clockwise | 4.5 | 1 | 0.8 | 2 | 1 [4] | **SQN31.121A2760** | |
| 5 | 0 | Clockwise | 4.5 | 1 | 0.8 | 2 | 1 [4] | **SQN31.151A2700** | SQN31.151A1700 |
| 5 | 3 | Clockwise | 4.5 | 1 | 0.8 | 2 | 1 | SQN31.151A2730 | |
| 2 [6] | 0 | Clockwise | 12 | 1.8 | 1.8 | 2 | 1 [4] | **SQN31.221A2700** | |
| 2 [6] | 3 | Clockwise | 12 | 1.8 | 1.8 | 2 | 1 [4] | **SQN31.221A2730** | |
| 5 | 0 | Clockwise | 12 | 1.8 | 1.8 | 2 | 1 [4] | **SQN31.251A2700** | SQN31.251A1700 |
| 5 | 3 | Clockwise | 12 | 1.8 | 1.8 | 2 | 1 | **SQN31.251A2730** | |
| 5 | 0 | Clockwise | 15 | 1.8 | 1.8 | 2 | 1 [4] | **SQN31.351A2700** | |
| 0 | 0 | Clockwise | 30 | 3 | 3 | --- | 3 | **SQN31.401A2700** | SQN31.401A1700 |
| 0 | 3 | Clockwise | 30 | 3 | 3 | --- | 3 | **SQN31.401A2730** | |
| 0 | 6 | Clockwise | 30 | 3 | 3 | --- | 3 | **SQN31.401A2760** | |
| 1 | 0 | Clockwise | 30 | 3 | 3 | 1 | 2 | **SQN31.411A2700** | |
| 1 | 3 | Clockwise | 30 | 3 | 3 | 1 | 2 | **SQN31.411A2730** | |
| 6 | 0 | Clockwise | 23 | 2.5 | 2.5 | 2 | --- [4] | **SQN31.762A2700** | |
| 4 | 0 | Clockwise | 120 | 6 | 6 | 1 | 2 | **SQN31.941A2700** | |
| 0 | 3 | Clockwise | 12 | 1.8 | 1.8 | --- | 3 | **SQN31.201A2730** | |

### Actuators SQN30... with high cover for fitting a potentiometer

| Diagram no. | Drive shaft [1] no. | Direction of rotation [7] | Running time at 50 Hz [2] for 90° | Operating torque (max.) Nm | Holding torque Nm | Relay [9] Pcs. | AS [10] Pcs. | AC 220 V -15 % AC 240 V +10 % 50...60 Hz Type reference | AC 100 V -15 % AC 110 V +10 % 50...60 Hz Type reference [5] |
|---|---|---|---|---|---|---|---|---|---|
| 0 | 0 | [11] | 30 | 3 | 3 | --- | 3 | **SQN30.402A2700** | SQN30.402A1700 |
| 0 | 3 | [11] | 30 | 3 | 3 | --- | 3 | **SQN30.402A2730** | |
| 0 | 6 | [11] | 30 | 3 | 3 | --- | 3 | **SQN30.402A2760** | |

## Actuators SQN31... with high cover for fitting a potentiometer

| Diagram no. | Drive shaft [1] no. | Direction of rotation [7] | Running time at 50 Hz [2] for 90° | Operating torque (max.) Nm | Holding torque Nm | Relay [9] Pcs. | AS [10] Pcs. | AC 220 V -15 % AC 240 V +10 % 50...60 Hz Type reference | AC 100 V -15 % AC 110 V +10 % 50...60 Hz Type reference [5] |
|---|---|---|---|---|---|---|---|---|---|
| 0 | 0 | Clockwise | 30 | 3 | 3 | --- | 3 | **SQN31.402A2700** | SQN31.402A1700 |
| 0 | 0 | Clockwise | 4.5 | 1 | 0.8 | --- | 3 | **SQN31.102A2700** | SQN31.102A1700 |
| 0 | 0 | Clockwise | 12 | 1.8 | 1.8 | --- | 3 | **SQN31.202A2700** | SQN31.202A1700 |
| 5 | 0 | Clockwise | 12 | 1.8 | 1.8 | 2 | 1 [4] | **SQN31.252A2700** | SQN31.252A1700 |

## Actuators SQN4...

| Diagram no. | Drive shaft [1] no. | Direction of rotation 7) | Running time at 50 Hz [2] for 90° | Operating torque (max.) Nm | Holding torque Nm | Relay 9) Pcs. | AS 10) Pcs. | AC 220 V -15 % AC 240 V +10 % 50...60 Hz Type reference 5) | AC 100 V -15 % AC 110 V +10 % 50...60 Hz Type reference [5] |
|---|---|---|---|---|---|---|---|---|---|
| 0 | 0 | Clockwise | 120 | 6 | 6 | --- | 3 | | SQN41.902A1700 |
| 4 | 0 | Clockwise | 120 | 6 | 6 | 1 | 2 | **SQN41.941A2700** | |

Legend to «Type summary»

[1]) Refer to «Dimensions»
[2]) At 60 Hz, running times are about 20 % shorter
[3]) On time at
- AC 220 V -15 % / +10 % and 50 Hz – max. 50 %
- AC 240 V -15 % / +10 % and 50 Hz – max. 35 %

[4]) Additional switches for special applications (refer to «Connection diagrams»)
[5]) For actuators suited for fitting a potentiometer (refer to «Mechanical design»)
[6]) Actuators with diagram no. 2 may not be used in connection with the LOA26...
[7]) When facing the drive shaft and when control voltage is fed to end switch I
[8]) **Types in normal print and other types on request**
[9]) Built-in relays
[10]) Free auxiliary switches (in addition to the 2 end switches)
[11]) Counterclockwise

## Ordering

When ordering, please give type reference of actuator and accessories according to «Type summary».

Example

| | |
|---|---|
| SQN30.402A2730 | - Actuator with counterclockwise rotation<br>- Drive shaft no. 3<br>- Running time 30 seconds<br>- Internal diagram no. 0<br>- AC 220 V<br>- For fitting a potentiometer |
| ASZ8.703 | Coiled potentiometer 220 Ω / 90° ∢, triple pole |

Example of conversion by the user

| | |
|---|---|
| SQN30.401A2730 | - Actuator, not suited for fitting a potentiometer |
| AGA32 | - Conversion kit |
| ASZ8.703 | - Potentiometer |

Potentiometers must be ordered as **separate** items.

## Accessories

**Adapter**

In addition to the actuator, the following items are to be ordered **separately**:

**Conversion kit** **AGA32**

- For converting a basic version to a version for fitting a potentiometer (refer to Data Sheet 7921)

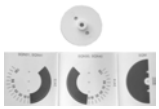

**Service kit** **AGA33**

- For replacing old potentiometers ASZ...5... / ASZ...6... by new potentiometers ASZ...7... and ASZ...8... (refer to Data Sheet 7921)

## Technical data

General actuator data

| | | |
|---|---|---|
| **Actuator** | Mains voltage | AC 220 V –15 %...AC 240 V +10 %<br>AC 100 V –15 %...AC 110 V +10 % |
| | Mains frequency | 50...60 Hz ±6 % |
| | Type of motor | synchronous motor |
| | Power consumption | 6.5 VA |
| | Angular position | max. 160° |
| | Mounting position | optional |
| | Degree of protection | IP 40 to DIN 40050, provided adequate cable entries and screws are used |
| | Cable entry | suited for 1 x Pg9 and 1 x Pg11, no locknut required |
| | Cable connections | screw terminals for wires having a cross-sectional area of 0.5 to 2.5 mm² |
| | Ferrules | matching the dia. of the stranded wire |
| | Direction of rotation | refer to «Type summary» |
| | Torques and holding torques | refer to «Type summary» |
| | Running times | 4.5...120 s for 90° |
| | Coupling | drive shaft / geartrain by means of a pin |
| | Weight (on average) | approx. 800 g |
| **End and auxiliary switches** | Number of end switches | 2 |
| | Number of auxiliary switches | 1...3 |
| | Actuation | via camshaft |
| | Switching voltage | AC 24...250 V |
| | Terminal rating at cos φ = 0.9: | under load ON, with no load OFF<br>- starting current 14 A<br>- operating current 2 A<br>Under load ON...OFF<br>- starting current 7 A<br>- operating current 1 A |
| | Adjustment of cams in increments of | 1° |
| Norms and standards | **Environmental conditions** | |
| | **Transport** | DIN EN 60 721-3-2 |
| | Climatic conditions | class 2K2 |
| | Mechanical conditions | class 2M2 |
| | Temperature range | -50...+60 °C |
| | Humidity | < 95 % r.h. |
| | **Operation** | DIN EN 60 721-3-3 |
| | Climatic conditions | class 3K5 |
| | Mechanical conditions | class 3M2 |
| | Temperature range | -20...+60 °C |
| | Humidity | < 95 % r.h. |

⚠ **Condensation, formation of ice and ingress of water are not permitted!**

## Function

The synchronous motor drives the actuator's drive shaft via the geartrain. The attached camshaft actuates the end and auxiliary switches. The switching position of each end and auxiliary switch can be adjusted within its working range via the associated cam. Some of the actuator versions are equipped with electronic modules that perform auxiliary functions in connection with the end and auxiliary switches or with external devices, such as controllers (refer to «Connection diagrams»).

## Connection diagrams

### No. ② → LOA... / LMO... — 2-stage operation

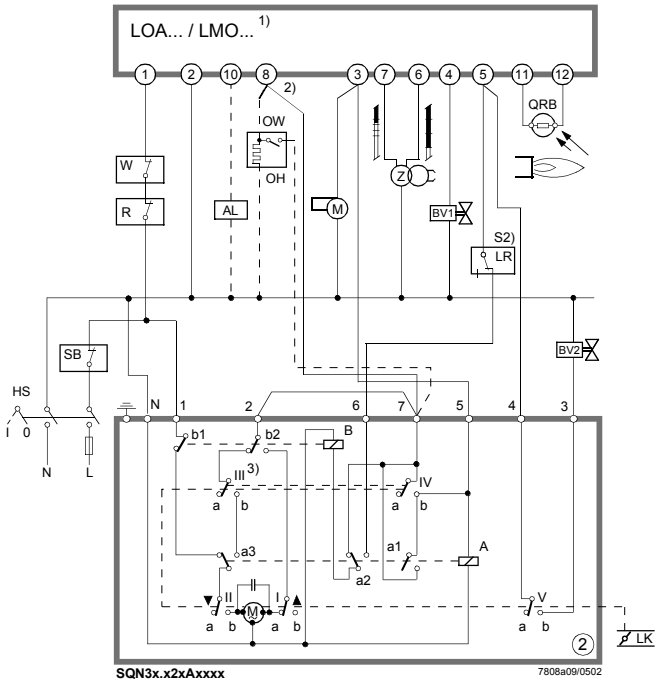


**Prepurge at low-fire position «KL»** (see «S5»)

Program sequence with no oil preheater

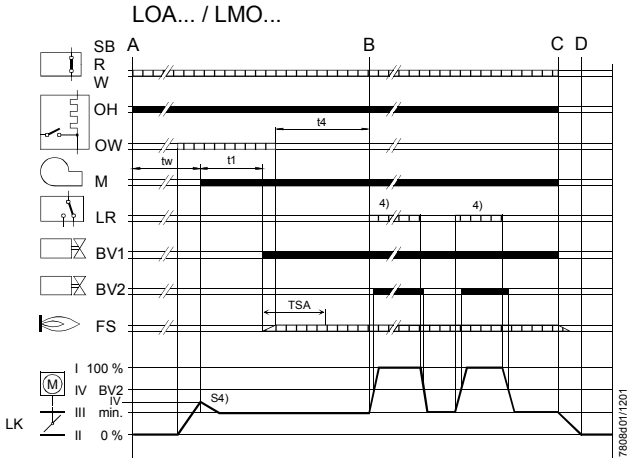


1) Not suited for use in connection with LOA26...
2) Broken lines: With oil preheater
3) Cams III and IV are rigidly connected
4) Voltage at terminal no. 6 of SQN3...

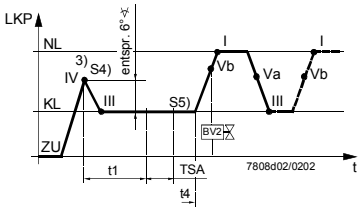


### No. ② → LMG21... / LMG25... / LGB21... — 2-stage operation

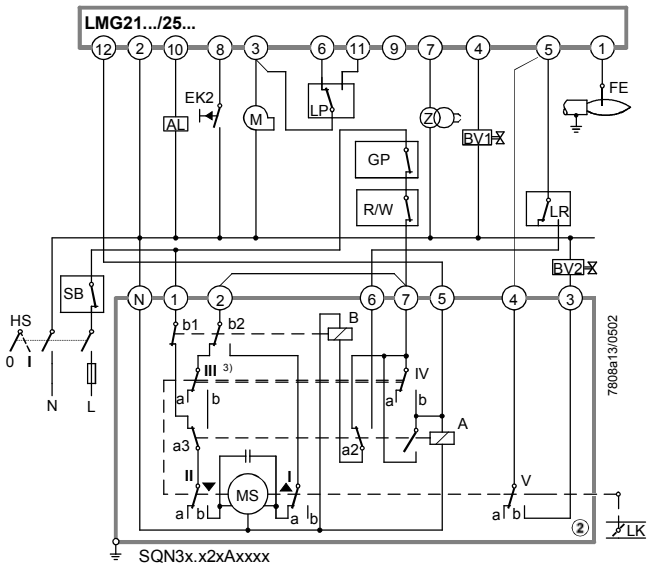


**Prepurge at low-fire position «KL»**

LMG21... / LMG25... / LGB21...

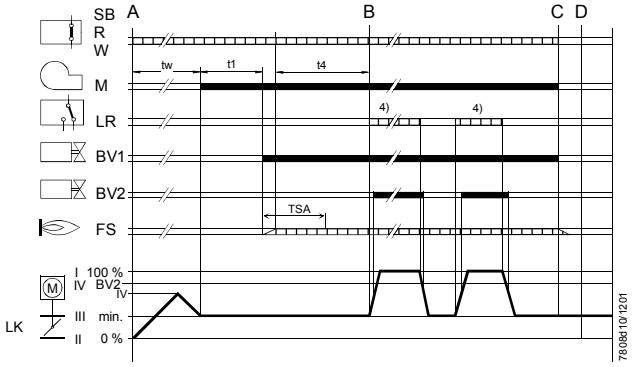


3) Cams III and IV are rigidly connected
4) Voltage at terminal no. 6 of SQN3...

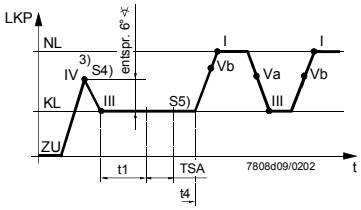


For notes on «S1...S5», refer to «Notes on connection diagrams»

## Connection diagrams

### No. ⑤ → LMG22... / LGB22... / LGB32...

### Modulating or 2-stage operation «S1»
### Prepurge at nominal load position «NL»

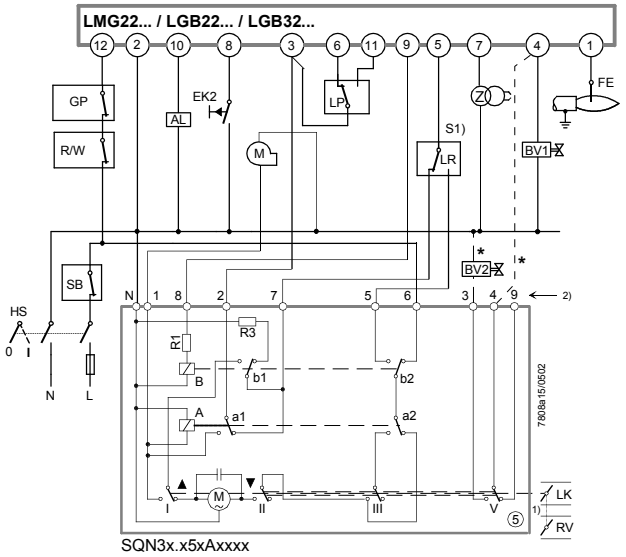


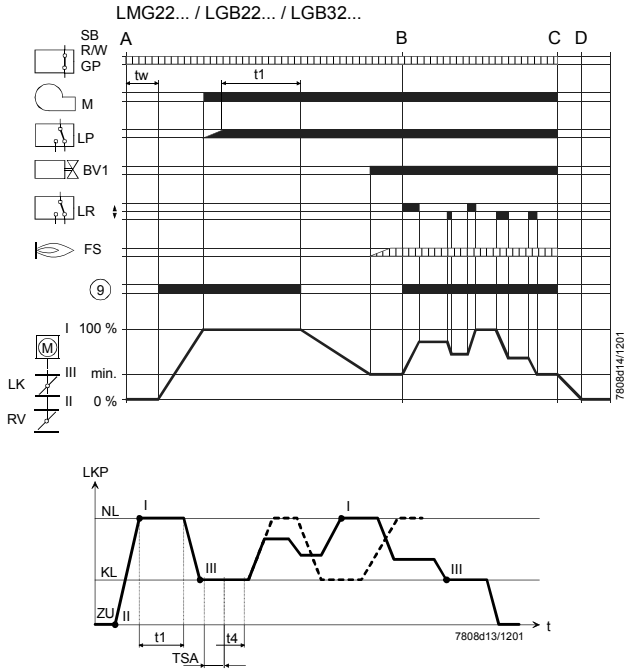


*** Note:**
With 2-stage modulating burners (with gas control damper «RV»), «BV2» is not used and the broken connecting line between terminals (*) does not apply.

1) For arrangement with modulating operation, refer to «S1»
2) Actuator with connection diagram no. 5 and **last digit of type reference = 6** (8th character after the dot), uses **other** terminal markings

Program sequence diagrams show modulating operation.
Dotted line: 2-stage operation

### No. ⑥ → LMG22... / LGB22... / LGB32...

### Modulating or 2-stage operation «S1»
### Prepurge at nominal load position «NL»

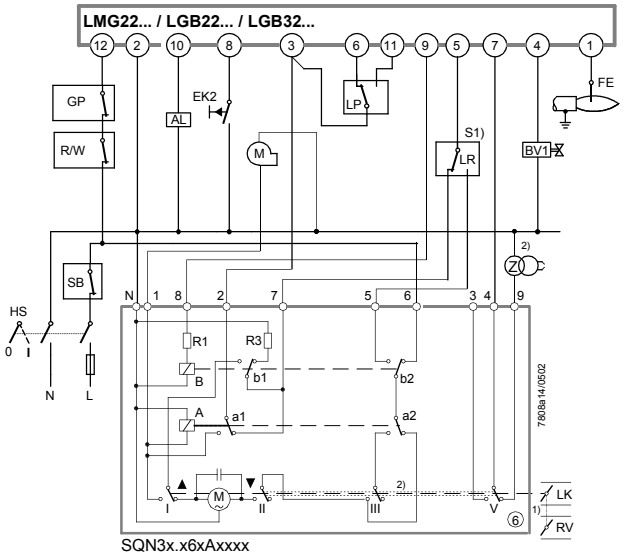


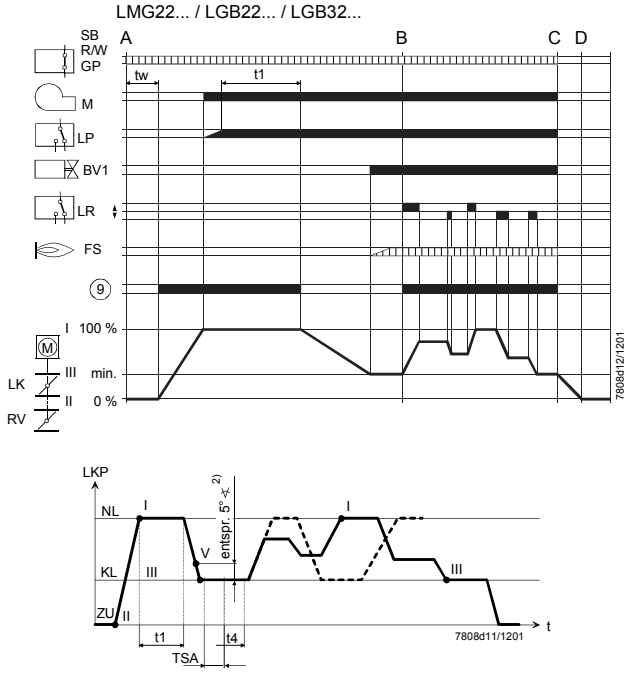


1) Arrangement for modulating and 2-stage operation is identical. No «BV2», refer to «S1»
2) Cams of switches III and V are rigidly connected. This is required to ensure that the flame will be established only when damper ignition position «KL» is reached, that is, that ignition takes place at low-fire «KL»

Program sequence diagrams show modulating operation.
Dotted line: 2-stage operation

⚠ **If the contacts of switch V welded in position 4 → 9, supervision of the ignition load position would be negated and it would not be detected in operation. This means that the circuit is not safety-related but only used for supervision purposes. The user must ensure that in the event of failure (should the burner ignite at nominal load «NL»), no damage will occur.**

For notes on «S1...S5», refer to «notes on connection diagrams»

## N0. ⓪ → LFL... / LGK16... / LAL... / LOK16...

## 2-stage or modulating operation
**Prepurge at nominal load position «NL»**

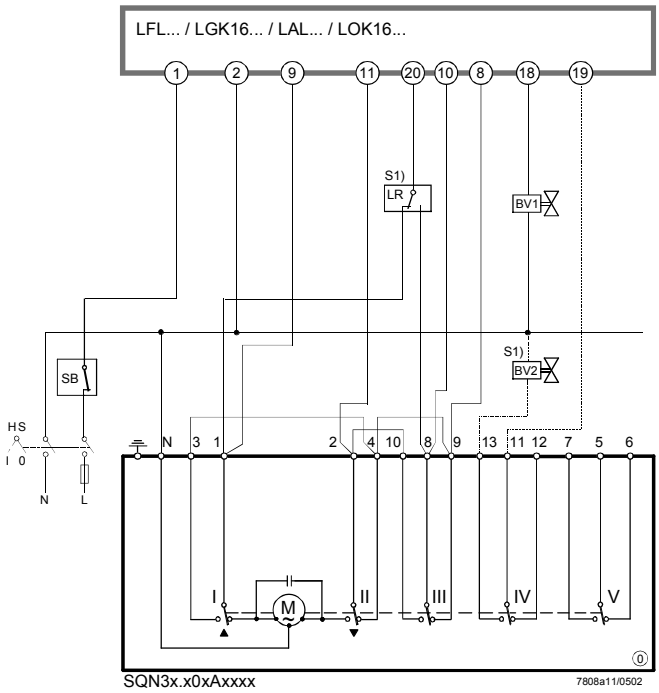


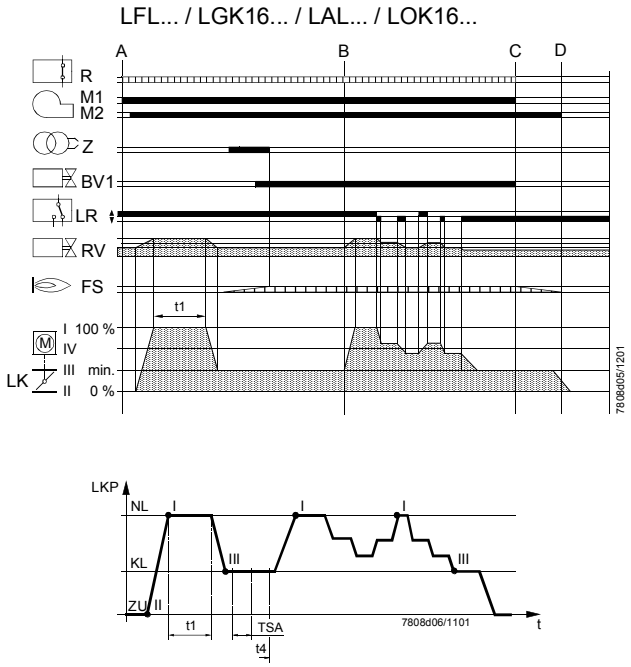


Program sequence diagrams show modulating operation

## No. ① → LFL... / LGK16... / LAL... / LOK16...

## 2-stage operation
**Prepurge at nominal load position «NL»**

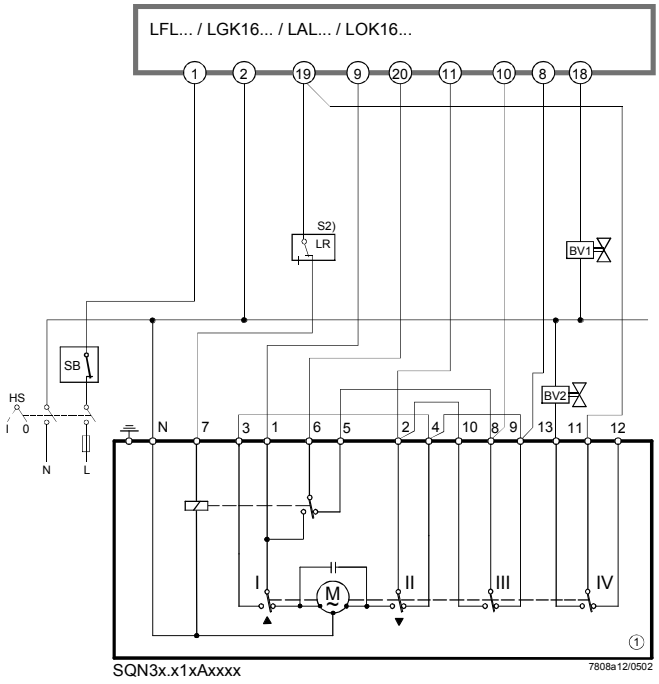


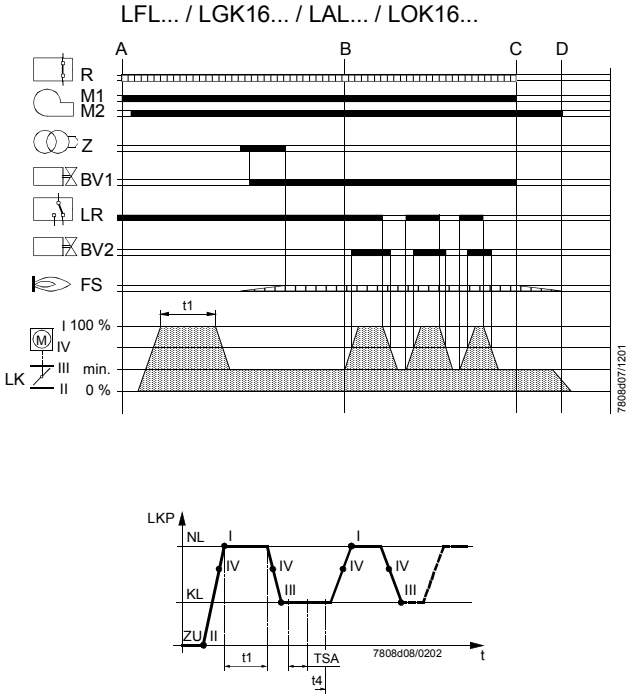


For notes on«S1...S5», refer to «Notes on connection diagrams»

## Connection diagram

**No. ③ → TMG740 / TMO720** | **2-stage operation**

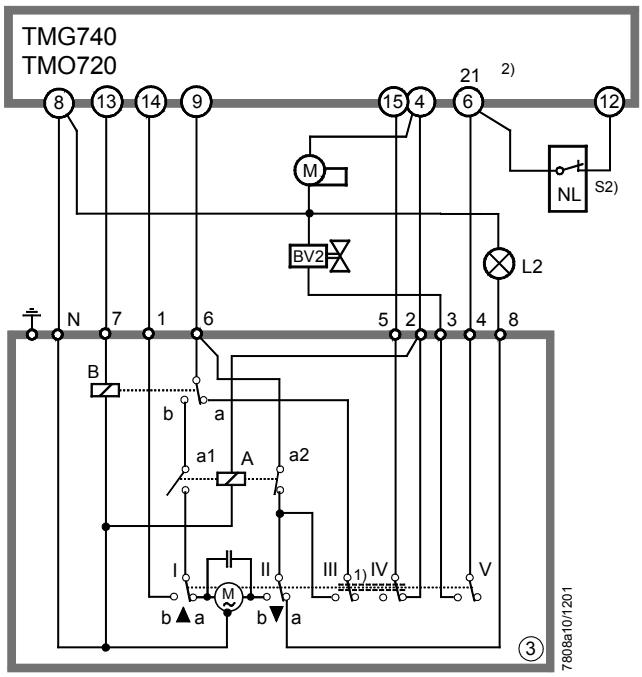


SQN3x.x3xAxxxx

1) Cams of switches III and IV are rigidly connected

2) TMO720 terminal no. 6
TMG740 terminal no. 21

**Prepurge at nominal load position «NL»**

- **TMG... and TMO... are devices of other manufacture. They are neither made nor supplied by Siemens. Combination with the type of Siemens actuator proposed here must be checked with the supplier of the TMG... or TMO... while taking into consideration safety aspects and the current version of the burner control.**
  **The user assumes full responsibility for this application.**

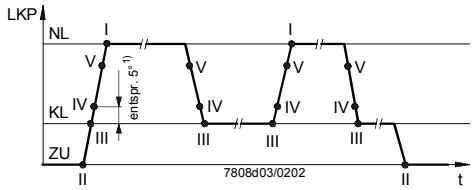


**No. ④ → Special application**

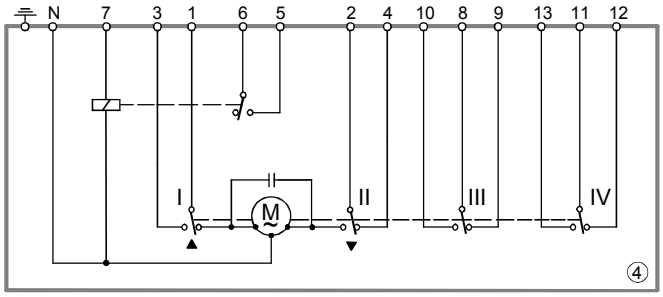


SQN4x.x4xAxxxx 7808d04/1101

For notes on «S1...S5», refer to «Notes on connection diagrams»

| | | |
|---|---|---|
| Legend | No. ② | Number corresponds to the designation number or letter of the internal circuit of the SQN3... (second character after the dot in the type code) |
| | AL | Remote indication of fault (alarm) |
| | BV1 | Fuel valve stage 1 |
| | BV2 | Fuel valve stage 2 |
| | EK2 | External remote reset button |
| | FE | Ionization probe |
| | FS | Flame signal amplifier |
| | GL | Gas / air ratio controller |
| | GP | Gas pressure switch |
| | HS | Main switch |
| | KL | Low-fire |
| | L | Live conductor |
| | LK | Air damper |
| | LKP | Air damper position |
| | LP | Air pressure switch |
| | LR | **Load controller** (also refer to «S1») |
| | M | Burner or fan motor |
| | Ⓜ | Actuator's synchronous motor |
| | M1 | Without postpurge |
| | M2 | With postpurge |
| | N | Neutral conductor |
| | NL | Nominal load |
| | OH | Oil preheater |
| | OW | Oil preheater's readiness contact |
| | QRB... | Photoresistive flame detector |
| | R | Temperature or pressure controller |
| | | Relay |
| | RV | Control damper |
| | SA | Actuator |
| | | Fuse |
| | SB | Safety limiter |
| | ST... | Stage |
| | t... / T... | Program times (refer to the Data Sheet of the relevant burner control) |
| | TSA | Safety time |
| | R | Resistance |
| | Z | Ignition transformer |
| | ZU | Damper fully closed |
| | ▲ | Direction of rotation OPEN |
| | ▼ | Direction of rotation CLOSE |

**Program sequence diagrams**

| | |
|---|---|
| A | Burner ON |
| A – B | Startup of burner |
| B – C | Burner operation / load control operation (modulating or 2-stage) |
| C | Burner OFF |
| C – D | Overrun time |
| D | End of program, burner control ready for a new start |

## Notes on «Connection diagrams»

**S1) Controller for:**

- **2-stage operation**

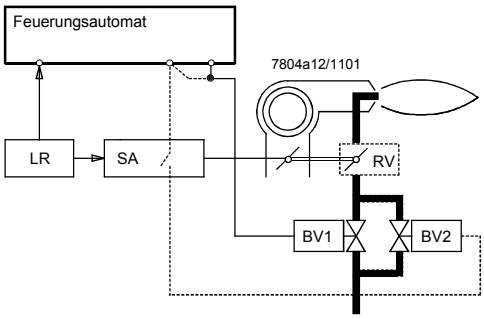


Thermostat or similar, with changeover contact (2-wire control).

In place of «BV2», a control damper can be used that is rigidly connected to the air damper (shown in dotted lines).

- **Modulating operation**

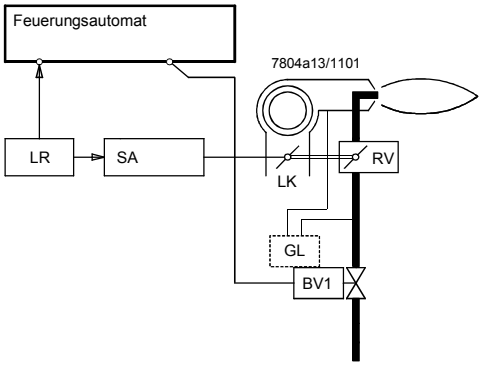


3-position controller for OPEN / CLOSE positioning pulses with neutral position (2-wire control).

«BV2» is not used. Gas / air ratio control is used instead.

This can be accomplished with

- a control damper «RV» which is rigidly connected to the air damper, or
- a gas / air ratio controller «GL» type SKP70... (refer to Data Sheet 7651) which – if combined with safety shutoff – is used in place of the «BV1» (shown in dotted lines)

LR load controller for temperature or pressure control from the Siemens range: **RWF40...**
Digital PID universal controller for

- temperature or pressure control
- 2-stage or modulating operation, and with special functions for heat generation plant (refer to Data Sheet 7865)

**S2)** Thermostat or similar with N.O. contact (single-wire control)

**S4)** If, during the program sequence, a damper switch position is approached from both sides, actuation does not take place in the same damper position due to the switching differential. To ensure that actuation occurs in the same position, the program sequence makes certain the required damper position will first be passed for a short moment.

**S5)** The prepurge rate of the heat generation system (boiler, stack, etc.) prior to flame establishment must be in compliance with country-specific regulations. As a general rule, the prepurge rate with oil burners should be 3 times the volume of the heat generation system, and with gas burners, 5 times that volume. These are guide values. The effective prepurge volume required depends primarily on the construction of the heat generation system and is entirely the responsibility of the system manufacturer. If prepurging is selected for the low-fire position, the **prepurge time** must be appropriately extended (against prepurging for the nominal load) to ensure the required air volume will be attained.

- **For supplementary connections** to the burner controls, refer to the relevant Data Sheets
- In the connection diagrams, **the position of the end and auxiliary switches** I...V in the actuator for the working range are shown between 0° and the adjusted angular position of the cams, that is, in the start position

- **Dimensions**

Dimensions in mm

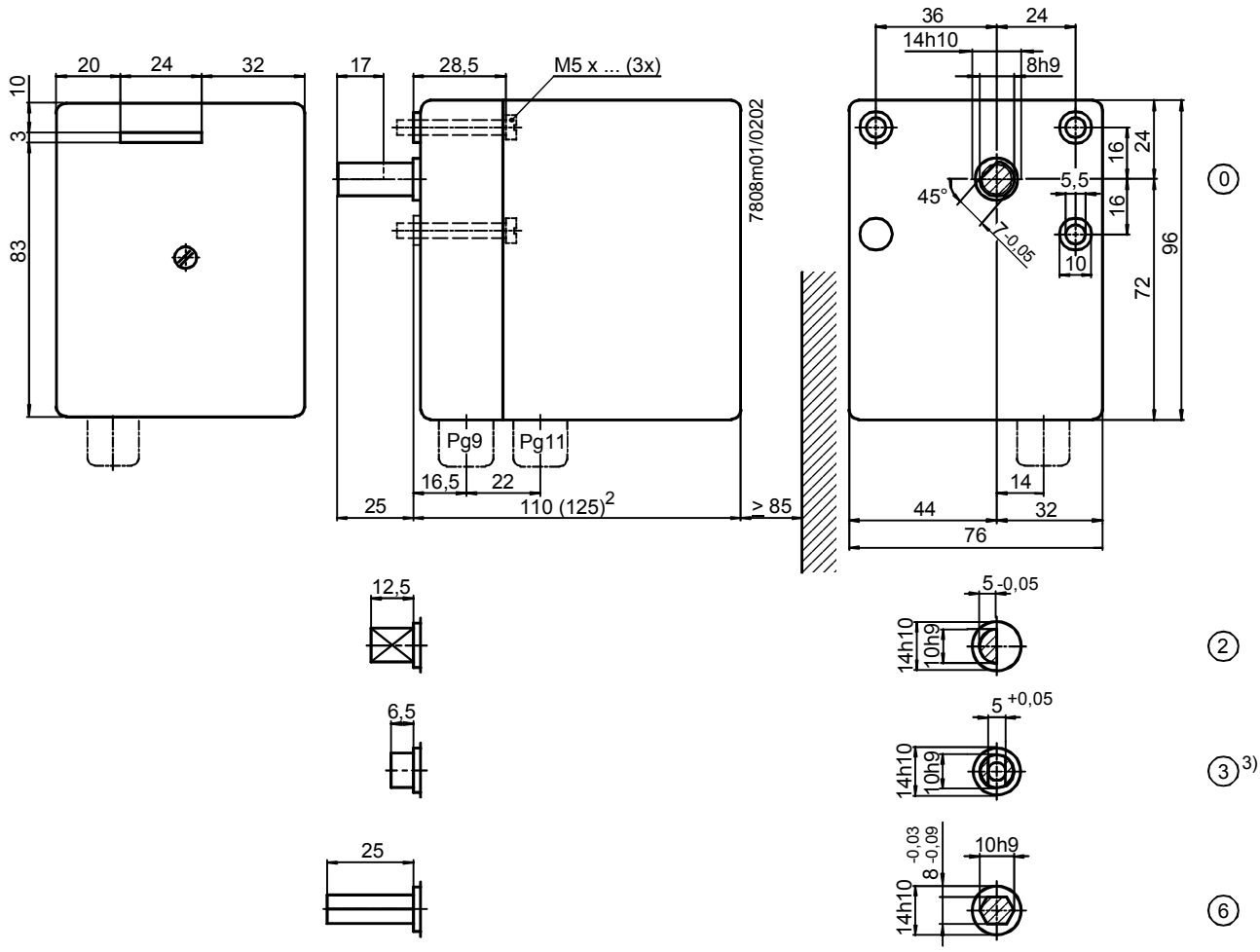


1) Drive shafts are shown in the fully closed position (voltage present at end switch II).
Drive shaft no. is identical to the last but one digit of the type reference.
**Example:** SQN31.401A27**6**0 = drive shaft no. 6

2) Height of actuator housing for fitting a potentiometer (SQN30...**2**A...)

3) Center slot: 6.3 mm deep
Hole dia. 5.1 mm: 16.5 mm deep (including depth of center slot)

©2002 Siemens Building Technologies AG
Subject to change!

Gtksnab
Оборудование для жизни

Мы ценим каждого клиента и предлагаем широкий ассортимент продукции. Оборудование соответствует всем директивам безопасности и имеет необходимые лицензии. Быстрая доставка по всей России и СНГ. Самовывоз со склада в Москве. Квалифицированные специалисты всегда готовы проконсультировать и помочь подобрать нужные запчасти. Доверьтесь нашему многолетнему опыту и надежности поставок! Интернет-магазин "Gtksnab".

## Остались вопросы?
## Нужно подобрать или заказать деталь?


Email
order@gtksnab.ru

Телефон
+7 (495)131-57-49

Whatsapp
+7(985) 991-80-53

Telegram
@gtksnab

Сайт
gtksnab.ru