SIEMENS

7802

Actuators SQN72…

Electromotoric actuators for air dampers and control valves of oil or gas burners of small to medium capacity.

The SQN72... and this Data Sheet are intended for use by OEMs which integrate the actuators in their products!

Use / features

The SQN7... actuators are designed for driving gas or air dampers of oil or gas burners of small to medium capacity, for load-dependent control of the fuel and the combustion air volume:

- In connection with P-PI or PID controllers, such as the RWF40...
- Directly via the different types of burner controls, such as LOA..., LMO..., LME..., or LFL...
- In connection with 1- or 2-wire control or 3-position controllers

- Features:
  - Impact-proof and heat-resistant plastic housings
  - Plug terminals for the electrical connections
  - Maintenance-free gear train (can be disengaged)
  - Internal position indication
  - Easy-to-adjust end and auxiliary switches for setting the switching points
  - Integrated electronic circuits
  - Degree of protection IP54
- Holding torque: 0.7...1.3 Nm
- Running time: 4...30 s
- Direction of rotation: counterclockwise

Warning notes

To avoid injury to persons, damage to property or the environment, the following warning notes must be observed!

Do not interfere with or modify the actuators!

- All activities (mounting, installation and service work, etc.) must be performed by qualified staff
- Before making any wiring changes in the connection area, completely isolate the plant from mains supply (all-polar disconnection). Ensure that the plant cannot be inadvertently switched on again and that it is indeed dead. If not observed, there is a risk of electric shock hazard
- Ensure protection against electric shock hazard by providing adequate protection for the connection terminals and by securing the housing cover
- Each time work has been carried out (mounting, installation, service work, etc.), check to ensure that wiring is in an orderly state
- Fall or shock can adversely affect the safety functions. Such actuators must not be put into operation, even if they do not exhibit any damage

Mounting notes

- Ensure that the relevant national safety regulations are complied with

Standards and certificates

Conformity to EEC directives

- Electromagnetic compatibility EMC (immunity)	2004/108/EC
- Low-voltage directive	2006/95/EC

ISO 9001: 2000
Cert. 00739

ISO 14001: 2004
Cert. 38233

Disposal notes

The actuators contain electrical and electronic components and must not be disposed of together with domestic waste.
Local and currently valid legislation must be observed.

Mechanical design

Housing	- Made of impact-proof and heat-resistant plastic - The housing accommodates: – The reversible synchronous motor with gear train, which can be **disengaged** – The camshaft of the control section – The relays, depending on the type of actuator – The switches, connected to the terminals via the printed circuit board Color: Gear train housing dark-grey, cover light-grey
Drive motor	- Reversible and locking-proof synchronous motor
Coupling	- Drive shaft can be manually disengaged from the gear train and motor (by pressing pin «K») - Automatic reengagement

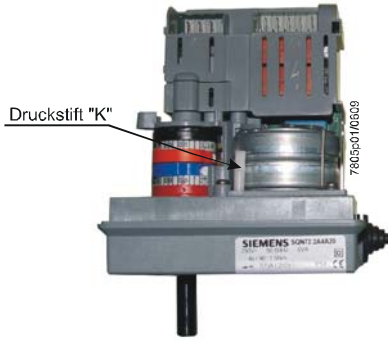

Adjustment of switching points	- Via adjustable cams - Scales beside the cams indicate the angle of the switching point - Assignment of cams to the end and auxiliary switches is color-coded (refer to «Connection diagrams») - Some of the cams feature fine adjustment; they can be adjusted with a standard screwdriver - The other cams can be adjusted manually or with the enclosed hook-spanner or similar tool
Position indication	- Internally: Scale at the beginning of the camshaft on the gear train side
Electrical connections	- Refer to «Technical data»
Gear train	- Maintenance-free
Drive shaft	- Made of black-finished steel - Ready fitted to the front of the gear train - As different actuator versions available
Mounting and fixing	- Front of the gear train is used as the mounting surface - Actuator is secured via through-holes

Versions for fitting potentiometer

Fitting a potentiometer	Certain types of actuators are supplied ready prepared for fitting a potentiometer. They are prepared for housing the potentiometer. Accessories are not required. The required type of potentiometer is to be ordered as a separate item (refer to «Ordering»). A detailed Mounting Instruction M7921 (4 319 9604 0) is included in delivery of ASZ...

Type summary (other types on request)

Diagram No.	Drive shaft [1]) No.	Running time [2]) for 90° s	Nominal torque [4]) (max.) Nm	Holding torque Nm	AS [5]) Pcs.	Relay Pcs.	Pot. [7])	Length of housing [1]) mm	Types for mains voltage / mains frequency AC 230 V [3]) +10 % -15 % 50...60 Hz
Actuators SQN70… / counterclockwise rotation [6])									
A	0	4	1,5	0,7	2	2	x	117	**SQN72.2A4A20**
A	0	12	2,5	1,2	2	2	x	117	**SQN72.4A4A20**
B	0	4	1,5	0,7	2	3	---	117	**SQN72.2B4A20** [8])
C	0	4	1,5	0,7	2	---	x	117	**SQN72.2C4A20**
C	0	30	2,5	1,3	2	---	x	117	**SQN72.6C4A20** [8])

Legend

1) Refer to «Dimensions»
2) Valid for 50 Hz; at 60 Hz, running times are about 20 % shorter
3) AC 230 V +10 % / -15 % possible, but in the case of undervoltage, torque is reduced by about 20 %
4) Under nominal conditions; under extreme conditions (e.g. +60 °C, AC 230 V –15 %) approx. –25 %
5) Auxiliary switches (in addition to the 2 end switches)
6) When facing the drive shaft and when control voltage is supplied to end switch I
7) Suited for direct fitting of potentiometer (refer to «Fitting a potentiometer»)
8) On request

Ordering

Actuator refer to «Type reference»

Potentiometer ASZ… refer to Data Sheet N7921
refer to Mounting Instructions M7921 (4 319 9604 0)

Technical data

Actuator	Mains voltage	AC 230 V –15 % +10 %
	Mains frequency	50...60 Hz ± 6 %
	Drive motor	Synchronous motor
	Power consumption	6 VA
	Angular adjustment	Max. 160°, scale range 0...130°
	Mounting position	Optional
	Degree of protection	IP54 to DIN 40050, when using the cable entry gland provided plus plastic washers for the fixing screws «M» as shown under «Dimensions»
	Safety class	II to VDE 0631
	Cable entry	Rubber grommet for single cable with a max. jacket dia. of 11 mm. The hole in the grommet must be adequately matched to the dia. of the jacket. To ensure that the grommet will be tight, the cable must be correctly laid in this area (no bends); the grommet is provided
	Cable strain relief	Cable strain relief with 2 fixing screws is provided
	Cable connections	2 plug-in spaces with connection terminals type CUM, made by Stelvio for the following types of connectors: - CUF 5-4 (plug-in space X1) - CUF 5-5 (plug-in space X2) Recommended cross-sectional area of stranded wire: min. 0.5 mm² , max. 1.5 mm²
	Ferrules	Adapted to cross-sectional area of stranded wire
	Direction of rotation	Refer to «Type summary»
	Nominal and holding torque	Refer to «Type summary»
	Running times	Refer to «Type summary»
	Weight (average)	Approx. 500 g
	On time	60 %, max. 3 min. continuous operation
	Backlash between drive motor and drive shaft	
	- As supplied	≤1.2° ±0.3°
	- After 250,000 cycles	≤1.5° ±0.3°

End and auxiliary switches

Number of end switches	2
Number of auxiliary switches	Refer to «Type summary»
Actuation	Via camshaft, color-coded cams (refer to «Connection diagrams») switches with fine adjustment: II and III
Breaking voltage	AC 24...250 V
Adjustment of cams	
- Without fine adjustment	1°
- With fine adjustment	Infinitely
Max. perm. amperage at cos φ = 0.9 (values in parentheses: short-time peaks for max. 0.5 s)	
• Diagram **A**	
– Terminals 1, 2, 3, 8	0.5 A
– Terminal 4, 5	2 A (14 A)
– Terminal 6, 7	1 A (7 A)
• Diagram **B**	
– Terminals 1, 3, 8	0.5 A
– Terminal 4, 5	3 A (14 A)
– Terminal 6, 7	1 A (7 A)
• Diagram **C**	
– Terminals 1, 2, 3, 4, 5	0.5 A
– Terminal 6, 7, 8	1 A (7 A)

Environmental conditions

Storage	DIN EN 60721-3-1
Climatic conditions	Class 1K3
Mechanical conditions	Class 1M2
Temperature range	-20...+60 °C
Humidity	<95 % r.h.
Transport	DIN EN 60721-3-2
Climatic conditions	Class 2K2
Mechanical conditions	Class 2M2
Temperature range	-50...+60 °C
Humidity	<95 % r.h.
Operation	DIN EN 60721-3-3
Climatic conditions	Class 3K5
Mechanical conditions	Class 3M2
Temperature range	-20...+60 °C
Humidity	<95 % r.h.

Condensation, formation of ice and ingress of water are not permitted!

Function

A synchronous motor drives a driveshaft with attached camshaft via a gear train. The camshaft actuates the end and the auxiliary switches. Using the associated cam, the switching position of each end and auxiliary switch can be adjusted within the working range. Some of the actuator versions are equipped with electronic modules, which perform auxiliary functions in connection with the end and auxiliary switches and external devices, such as controllers (refer to «Connection diagrams»).

Connection diagrams (examples)

All following connection diagrams show the start position as supplied:
- End switch position II «Closed»
- Dead

No. A → LME22...

2-stage or modulating operation → prepurging at nominal load position «NL»

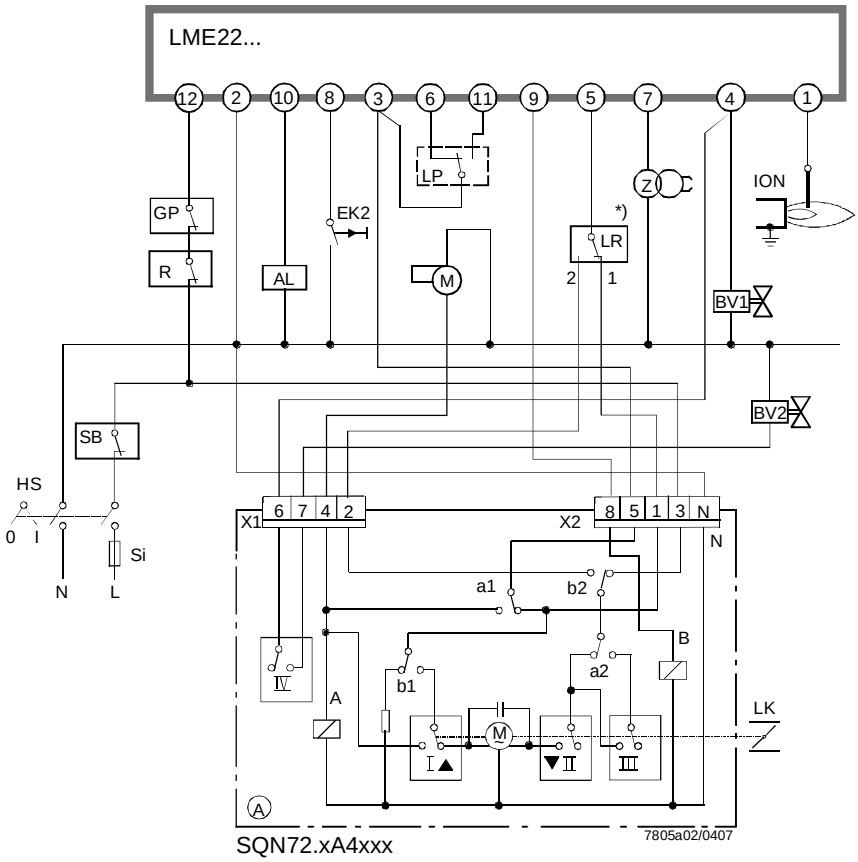

*) Thermostat or similar unit with changeover contact (2-wire control), or 3-position controller for «on / off» positioning pulses and neutral position

X1 Plug-in space, 4-pole

X2 Plug-in space, 5-pole

I Red
II Blue
III Orange
IV Black

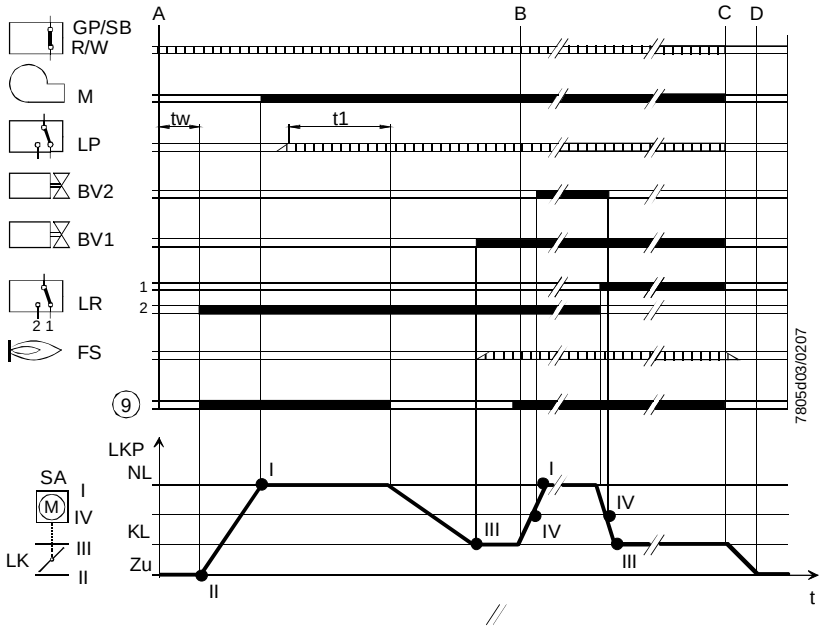

Sequence diagram shows 2-stage operation

No. B → LOA24... / LOA25... / LOA26... / LOA28... / LOA36... / LMO24... / LMO44...

2-stage operation → prepurging at low fire position «KL»

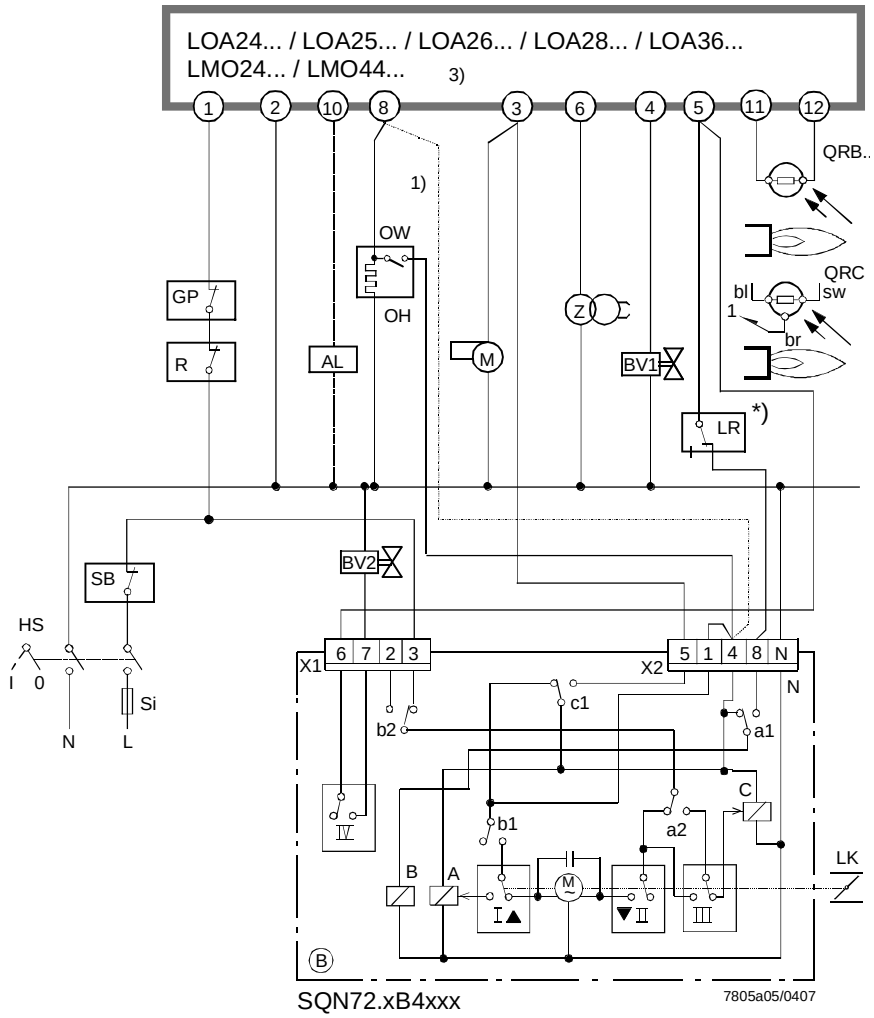

1) Without oil preheater

2) With oil preheater:
If «OW» contact opens during operation, a new start will be made

*) Thermostat or similar unit with n.o. contact (1-wire control)

X1 Plug-in space, 4-pole

X2 Plug-in space, 5-pole

I Red
II Blue
III Orange
IV Black

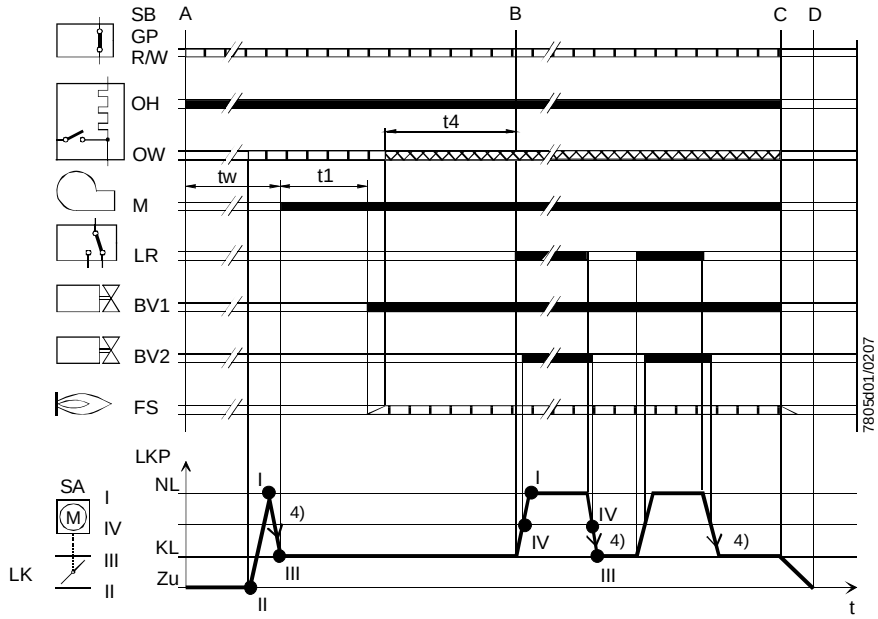

4) Required position is approached from only one side to eliminate switching differential (compensation of backlash)

No. C → LFL... / LGK16... / LAL... / LOK16...

2-stage or modulating operation → prepurging at nominal load position «NL»

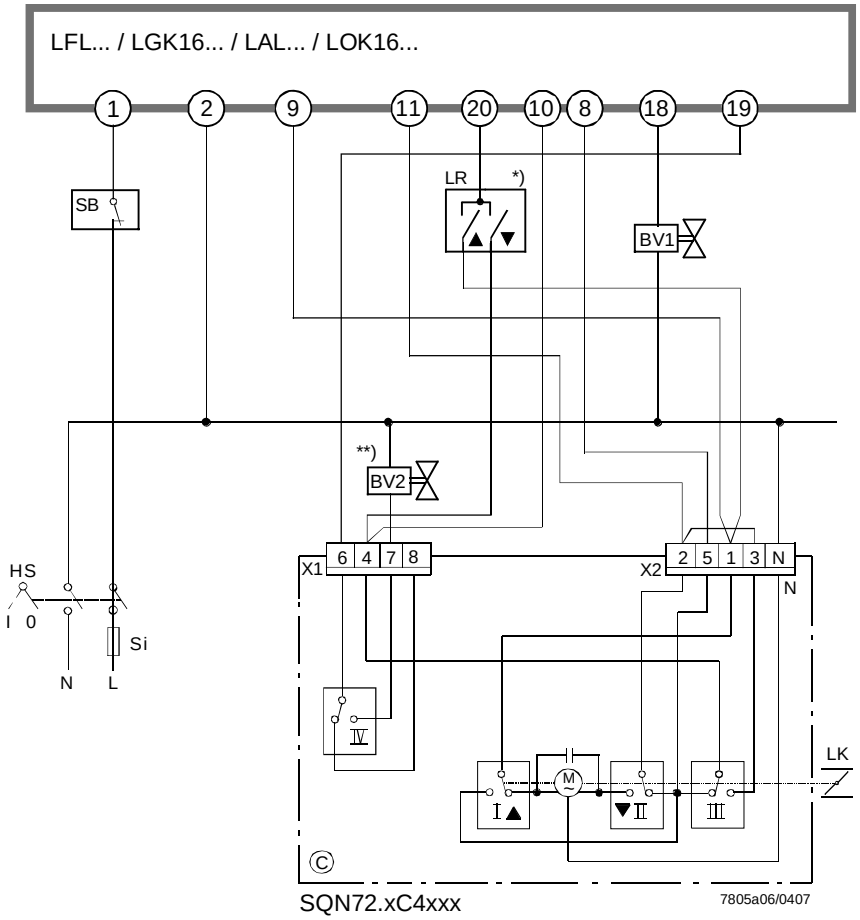

*) Thermostat or similar unit with changeover contact or 3-position controller for «on / off» positioning pulses and neutral position

**) In the case of modulating operation, fuel valve «BV2» is replaced by a gas control valve «RV»

X1 Plug-in space, 4-pole

X2 Plug-in space, 5-pole

I Red
II Blue
III Orange
IV Black

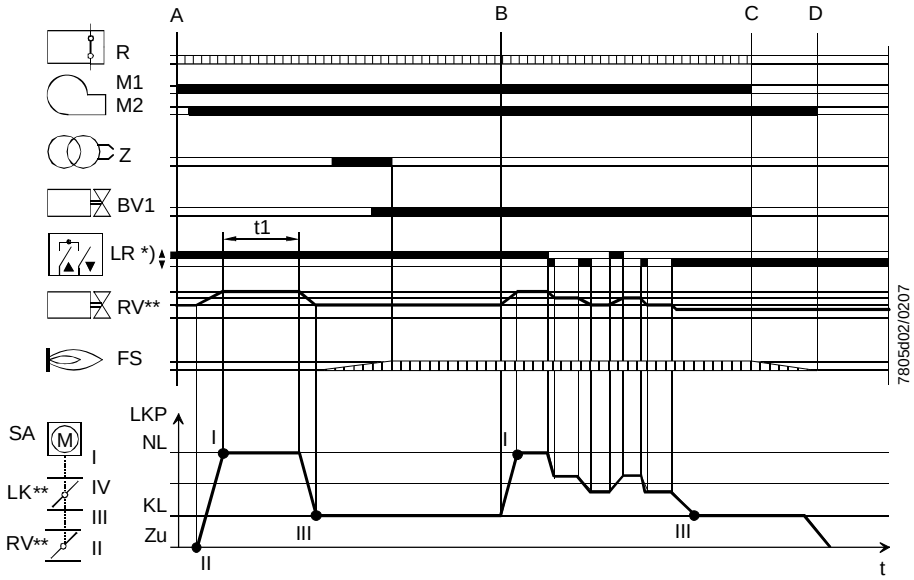

Program sequence diagram shows modulating operation

Legend

No. A	Number of internal diagram (second position after the dot in the type reference)
I / II	End switches
III / IV / V	Auxiliary switches
AL	Remote indication of lockout (alarm)
BV1	Fuel valve stage 1
BV2	Fuel valve stage 2
BV3	Fuel valve stage 3
EK2	External remote reset button
ION	Ionization probe
FS	Flame signal
GP	Gas pressure switch
HS	Main switch
KL	Low-fire
L	Live conductor
LK	Air damper
LKP	Air damper position
LP	Air pressure switch
LR	Load controller
M	Burner or fan motor
Ⓜ	Actuator's synchronous motor
M1	Without postpurge
M2	With postpurge
N	Neutral conductor
NL	Nominal load
OH	Oil preheater
OW	Oil preheater's release contact
QRB...	Photoresistive flame detector
R	Temperature or pressure controller
	Relay
RV	Control valve
SA	Actuator
Si	External primary fuse (as specified in the Data Sheet of the relevant burner control)
SB	Safety limiter
ST...	Stage
t... / T...	Program times (refer to the Data Sheet of the relevant burner control)
TSA	Safety time
R	Resistance
Z	Ignition transformer
CLOSED	Damper fully closed
▲	Direction of rotation OPEN
▼	Direction of rotation CLOSE

Program sequence - diagrams

A	Burner ON
A – B	Startup of burner
B – C	Burner operation / load control operation (modulating or 2-stage)
C	Burner OFF
C – D	Overrun time
D	End of program, burner control ready for new start
	Control signals delivered by burner control
	Required input signals
	Permissible input signals

Dimensions

Dimensions in mm

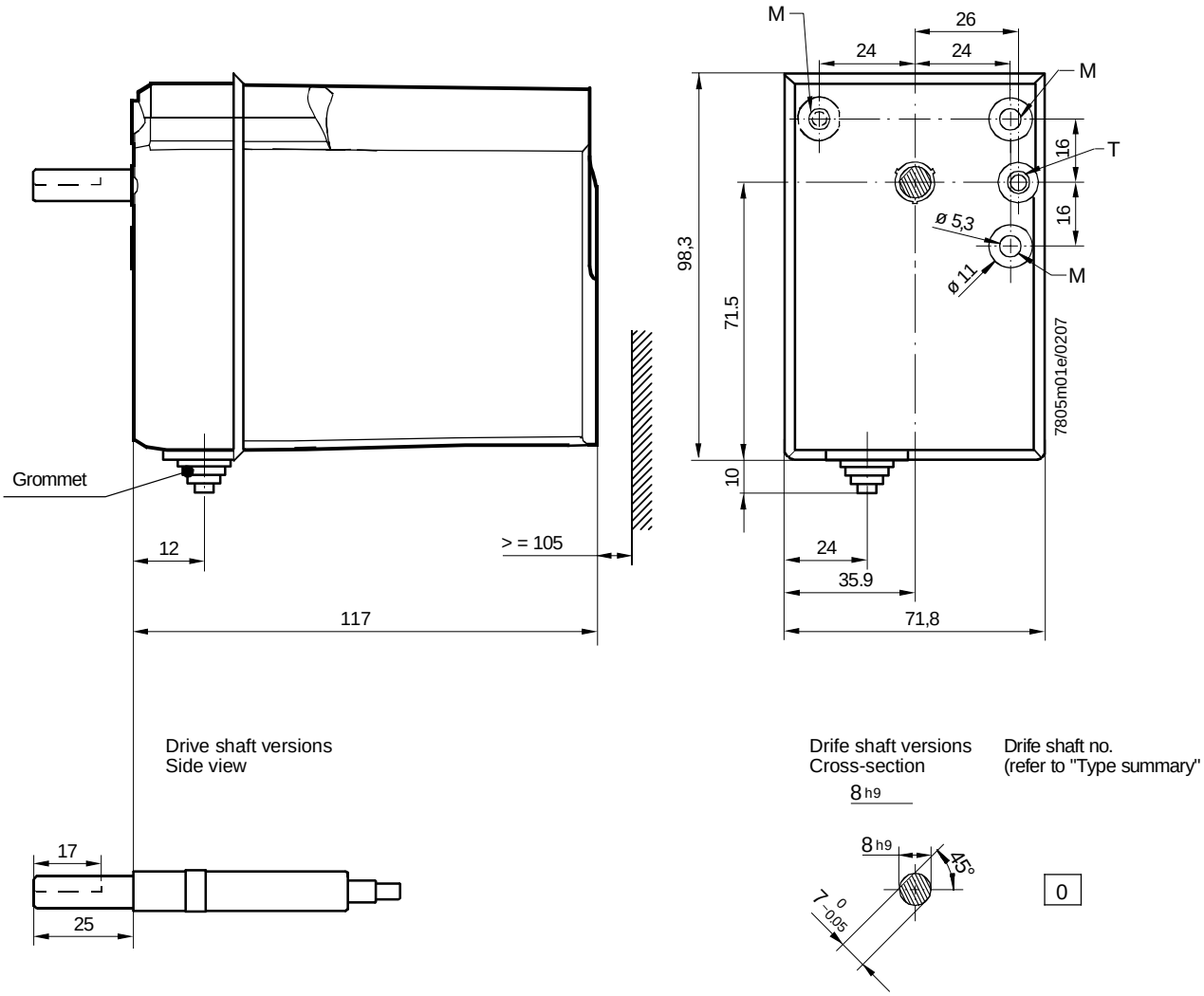

All drive shafts shown in end switch position II «Closed» as supplied.

M	Through-hole 5.3 mm dia.
T	Knockout hole 5.3 mm dia.

©2009 Siemens Building Technologies HVAC Products GmbH
Subject to change!

Gtksnab
Оборудование для жизни

Мы ценим каждого клиента и предлагаем широкий ассортимент продукции. Оборудование соответствует всем директивам безопасности и имеет необходимые лицензии. Быстрая доставка по всей России и СНГ. Самовывоз со склада в Москве. Квалифицированные специалисты всегда готовы проконсультировать и помочь подобрать нужные запчасти. Доверьтесь нашему многолетнему опыту и надежности поставок! Интернет-магазин "Gtksnab".

Остались вопросы?
Нужно подобрать или заказать деталь?

Email
order@gtksnab.ru

Телефон
+7 (495)131-57-49

Whatsapp
+7(985) 991-80-53

Telegram
@gtksnab

Сайт
gtksnab.ru