Double solenoid valve
Rp 3/8 - Rp 2
nominal diameters

DMV-D/11
DMV-DLE/11

DUNGS®
Combustion Controls

7.30

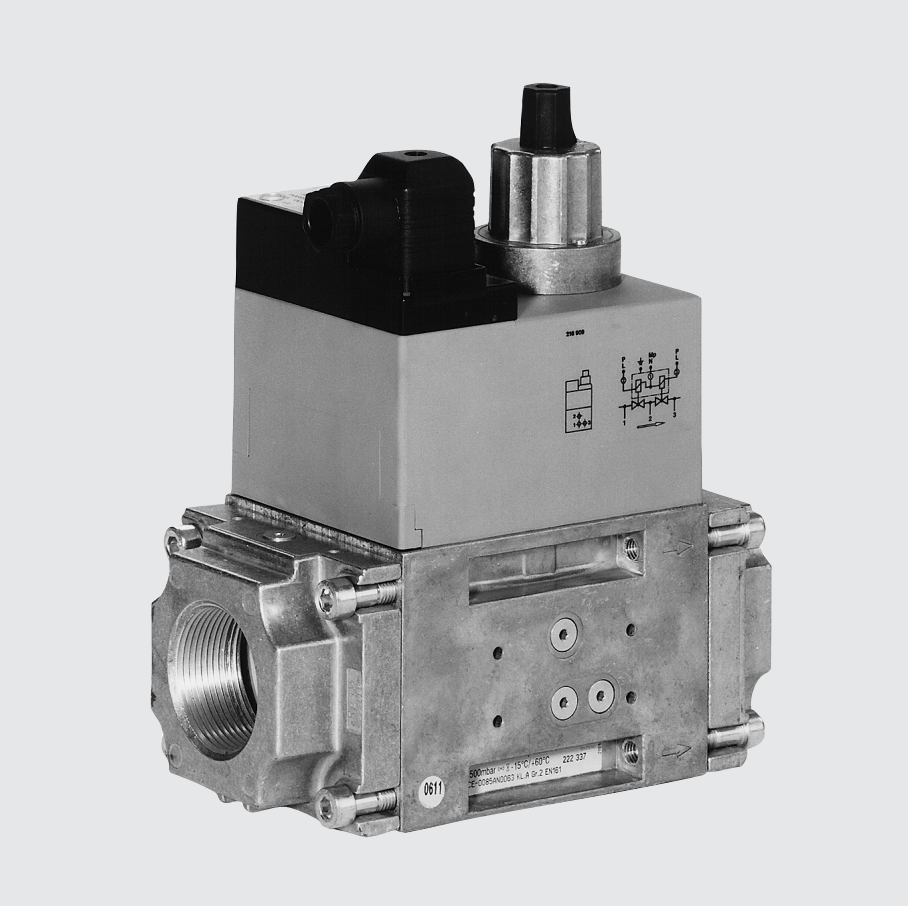

Technical description
The DUNGS double solenoid valve DMV integrates two solenoid valves in one compact fitting.

- Automatic shut-off valves as per DIN EN 161 Class A Group 2
- Two A valves in one housing
- Double seat valves
- High flow rates
- Max. operating pressure up to 500 mbar (50 kPa)
- Fast closing
- Fast opening (DMV-D/11) or slow opening (DMV-DLE/11) with adjustable fast stroke for start gas volume
- Adjustable main volume
- DC solenoid
- Mountable closed position signal contact
- Threaded flange
- Compact, light-weight

Application
Double solenoid valves are used where two single valve were mounted previously. In connection with DUNGS gas regulators and additional components, a wide variety of regulating tasks can be performed.
It does not contain any non-ferrous metals, suitable for gases of up to max. 0.1 vol.% H_2S, dry. Suitable for gases of families 1, 2, 3 and other neutral gaseous media.

Approvals
EC type testing certificate as per:
- EC-Gas Appliances Regulation

Other models available with approval for the North American market: U_L, FM, CSA as well as approvals in other important gas consuming countries.

Printed in Germany • Edition 01.18 • Nr. 218 375

DMV-D/11	Two single-stage solenoid valves normally closed, fast opening, fast closing. Manual limitation of flowing gas volume by main volume setting (D) at valve 1 (V1). Main volume setting (D) of DMV-D 503/11 at valve 2 (V2).
DMV-DLE/11	Two single-stage solenoid valves normally closed, slow opening (L), fast closing. Opening time setting (E) with fast stroke section at valve 2 (V2). Manual limitation of flowing gas volume by main volume setting (D) at valve 1 (V1). Main volume setting (D) of DMV-D 503/11 at valve 2 (V2).

Specifications

Nominal diameters Flange with pipe thread as per ISO 7-1	DMV 503 Rp 3/8,Rp 1/2	DMV 507 Rp 1/2,Rp 3/4,Rp 1	DMV 512, 520 Rp 1,Rp 1 1/4,Rp 1 1/2,Rp 2	DMV 525 Rp 2
	and their combinations			
Max. operating pressure	500 mbar (50 kPa)			
Solenoid valve V1	Automatic shut-off valve as per EN 161: Class A, Group 2			
Solenoid valve V2	Automatic shut-off valve as per EN 161: Class A, Group 2			
Closing time	< 1 s			
Opening time	DMV-D…/11: < 1 s DMV-DLE…/11: approx. 20 s at room temperature +20 °C and without fast stroke			
Fast stroke	Adjustable			
Main volume restrictor	DMV-D.../11 and DMV-DLE adjustable at V1, DMV-503/11 at V2			
Materials of gas conveying parts	Housing: aluminium, steel, no non-ferrous metals Seals at valve seat: NBR basis, suitable for gases as per G260/l			
Ambient temperature	-15 °C to +60 °C			
Installation position	Solenoid vertically upright to lying horizontally			
Dirt trap	Sieve installed. To protect the complete gas train we recommend you to install an upstream gas filter (refer to Datasheet 11.02)			
Measuring gas connection	G 1/8 DIN ISO 228 on both sides upstream of V1, between V1 and V2, downstream of V2 at input and output flanges. Pressure switch can be mounted to input and output flanges. By mounting a pressure switch, measuring/ignition gas connection can be partly excluded.			
Ignition gas connection	G 1/2 ignition gas flange as per ISO 228, possible on both sides between V1 and V2			
Burner pressure monitor p_{Br}	Connection downstream of V2 GW...A2 pressure switch can be mounted to the adapter laterally and to the flange			
Voltage/frequency	50 - 60 Hz, 220 V - 240 V AC, -15 % +10 %, further voltages on request Other preferred voltages: 50 - 60 Hz, 110 V - 120 V AC, 24 V - 28 V DC			
Rating / power consumption	at 230 V AC, +20 °C: refer to type overview			
Degree of protection	IP 54			
Switch-on duration	100 %			
Electrical connection	Plug connection as per DIN EN 175301-803, PG* 11 cable gland on request (* = heavy-gauge conduit thread)			
Radio interference	Degree of interference N			
Closed position signal contact	Type K01/1 (DIN tested), can be mounted to V1 and V2, DMV-503/11 only to V2			

Dimensions for DMV-D/11 and DMV-DLE/11

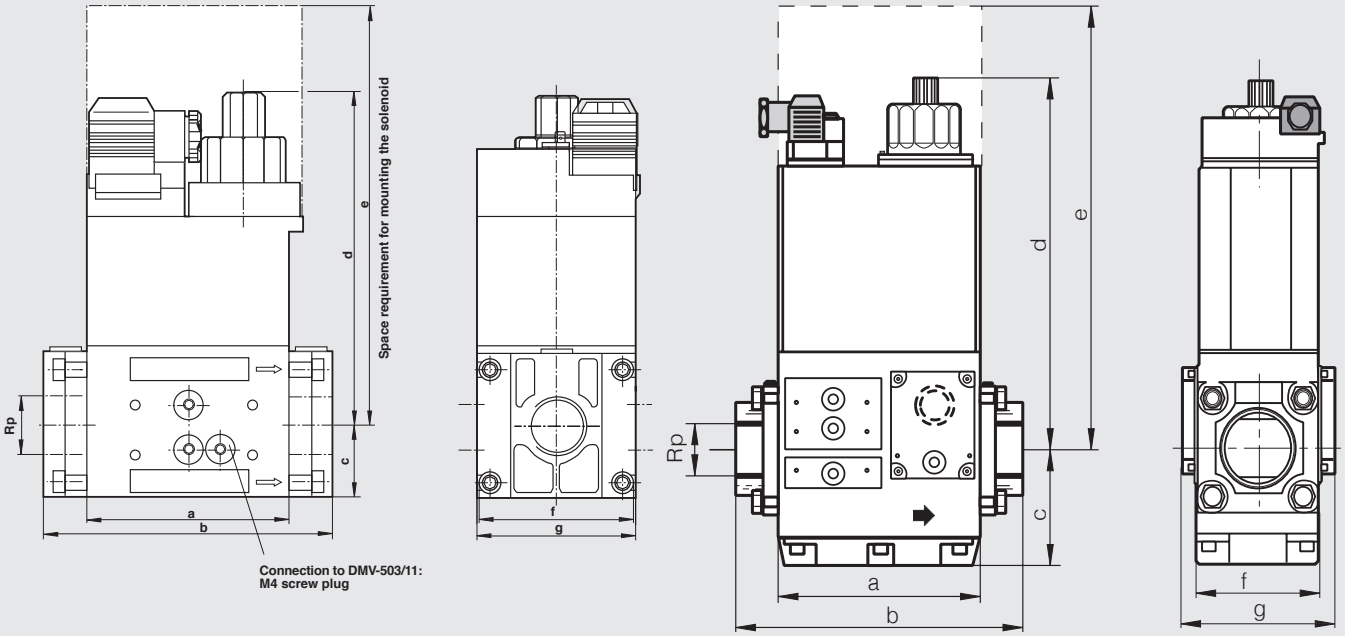

Version	Order No.	$p_{max.}$ [bar]	Connection Rp	Dimensions [mm] a	b	c	d	e	f	g	Rating [VA]	Solenoid No.	Switching rate h/[1)]	Weight [kg]
DMV-D 503/11	222 326	**0.5**	Rp 3/8 - Rp 1/2	77	121	30	109	190	73	73	35	1011	1000	1.7
DMV-D 507/11	222 331	**0.5**	Rp 1/2 - Rp 1	93	141	35	134	232	73	73	45	1111	1000	2.1
DMV-D 512/11	222 336	**0.5**	Rp 1 - Rp 2	124	174	45	150	254	99	101	65	1211	1000	4.6
DMV-D 520/11	221 924	**0.5**	Rp 1 - Rp 2	124	201	45	190	333	99	101	90	1212	1000	5.6
DMV-D 525/11	223 367	**0.5**	Rp 2	162	243	88	255	400	103	123	110	1411	1000	12.1
DMV-DLE 503/11	222 327	**0.5**	Rp 3/8 - Rp 1/2	77	121	30	125	190	73	73	35	1011	100	1.8
DMV-DLE 507/11	222 332	**0.5**	Rp 1/2 - Rp 1	93	141	35	160	232	73	73	45	1111	100	2.2
DMV-DLE 512/11	222 337	**0.5**	Rp 1 - Rp 2	124	174	45	179	254	99	101	65	1211	100	4.7
DMV-DLE 520/11	222 599	**0.5**	Rp 1 - Rp 2	124	201	45	218	333	99	101	90	1212	100	5.7
DMV-DLE 525/11	223 373	**0.5**	Rp 2	162	243	88	275	400	103	123	110	1411	100	12.3

1) Switching rate of DMV-DLE 50.../11 depends on opening time setting

Flange				for DMV .../11
Rp 3/8	217 471	–	–	DMV 503/11
Rp 1/2	217 472	–	–	DMV 503/11
Rp 1/2	222 341	**NPT 1/2**	222 371	DMV 507/11
Rp 3/4	222 342	**NPT 3/4**	222 368	DMV 507/11
Rp 1	222 001	**NPT 1**	221 999	DMV 507/11
Rp 1	222 343	**NPT 1**	222 369	DMV 512/11 - DMV 520/11
Rp 1 1/4	222 344	**NPT 1 1/4**	222 370	DMV 512/11 - DMV 520/11
Rp 1 1/2	221 884	**NPT 1 1/2**	222 003	DMV 512/11 - DMV 520/11
Rp 2	221 926	**NPT 2**	221 997	DMV 512/11 - DMV 520/11
Rp 2	215 384	**NPT 2**	232 407	DMV 525/11

Plug connection as per DIN EN 175301-803	210 319	DMV 503/11 - DMV 525/11	⚠ **Important: Always order flange, plug connection and system accessories separately.**

Equipment variants of DMV.../11 double solenoid valve, single-stage mode	DMV 503/11	DMV 507/11	DMV 512/11	DMV 520/11	DMV 525/11
DMV-D	♦	♦	♦	♦	♦
DMV-DLE	♦	♦	♦	♦	♦
Sieve	♦	♦	♦	♦	♦
Microfilter element, two-layer Refer to pressure losses	(♦)	(♦)	(♦)	(♦)	–
Gas pressure switch can be mounted:					
on flange	♦	♦	♦	♦	♦
downstream of sieve	♦	♦	♦	♦	♦
downstream of valve 2 to adapter	♦	♦	♦	♦	–
downstream of valve 2	–	–	–	–	♦
Valve V1, double-seat	♦	♦	♦	♦	♦
Valve V2, single-seat	♦	–	–	–	–
Valve V2, double-seat	–	♦	♦	♦	♦
Valves opening separately	♦	♦	♦	♦	♦
Flange	♦				
Rp 3/8	♦	–	–	–	–
Rp 1/2	♦	♦	–	–	–
Rp 3/4	–	♦	–	–	–
Rp 1	–	♦	♦	♦	–
Rp 1 1/4	–	–	♦	♦	–
Rp 1 1/2	–	–	♦	♦	–
Rp 2	–	–	♦	♦	♦
G 1/2 ignition gas flange can be mounted	♦	♦	♦	♦	♦
G 3/4 ignition gas flange can be mounted	–	–	–	–	♦

♦ = standard
(♦) = on request
-- = not possible

Flow losses in (m^3/h) air when installing the microfilter element

⚠ Pressure loss [mbar]	DMV 503/11	DMV 507/11	DMV 512/11	DMV 520/11	DMV 525/11
2	0,15	1,20	9,0	17,5	–
5	0,25	1,70	11,0	21,5	–
10	0,30	1,80	13,2	27,0	–
20	0,33	1,90	16,0	34,5	–
40	0,36	2,30	18,4	45,0	–
70	0,39	2,50	22,5	56,0	–

Double solenoid valve modular system

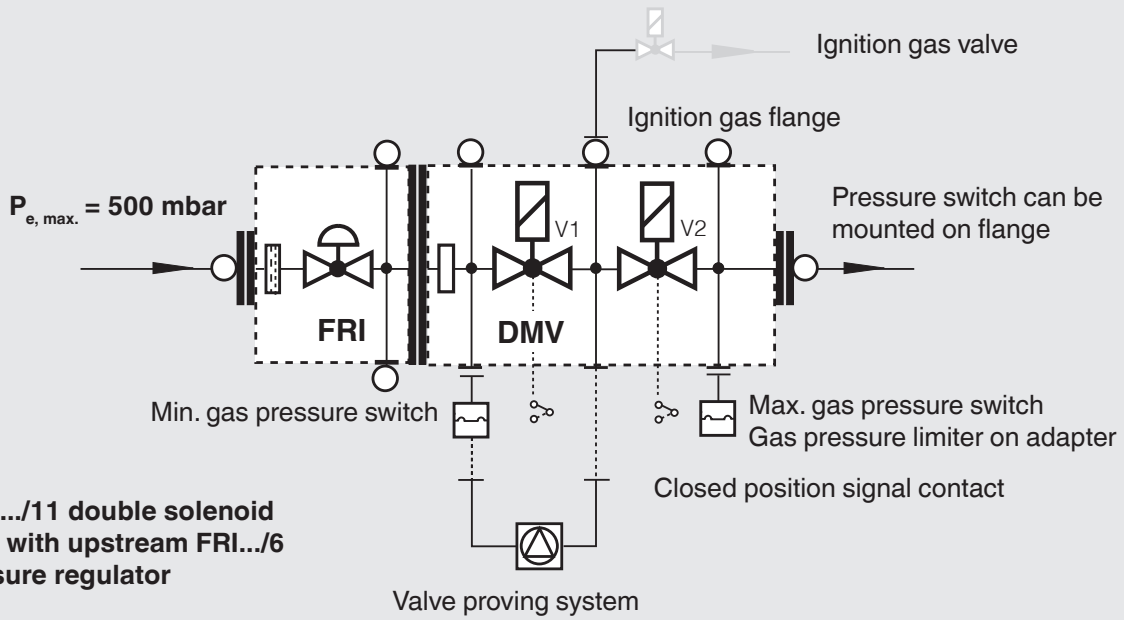

DMV .../11 double solenoid valve with upstream FRI.../6 pressure regulator

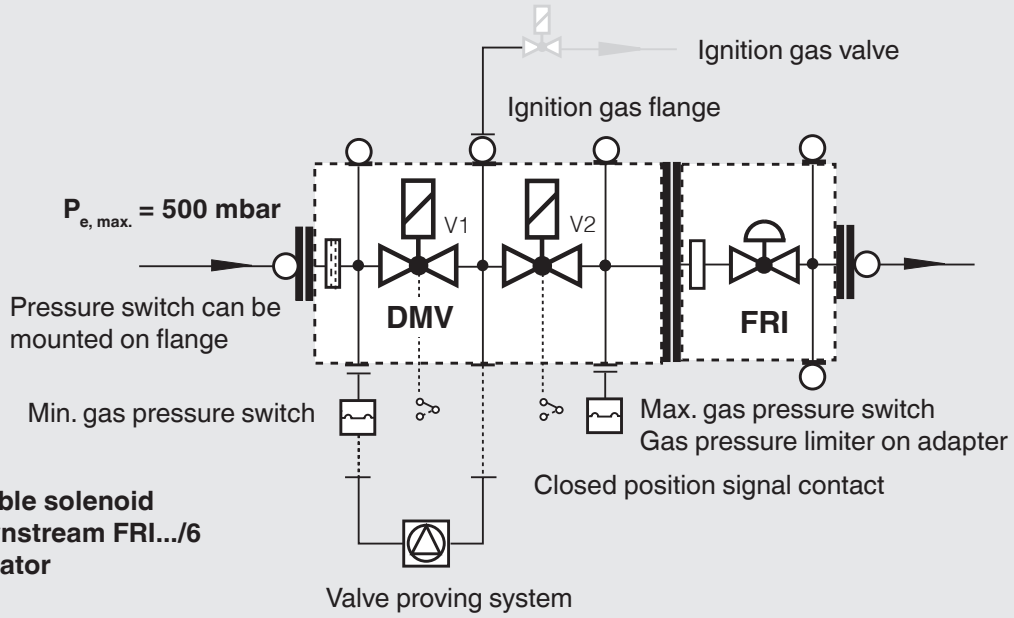

DMV .../11 double solenoid valve with downstream FRI.../6 pressure regulator

Gas pressure regulator, type FRI

The DMV-507-520/11 double solenoid valve is already prepared for connection with the gas pressure regulator, type FRI.../6 at the factory.
The pressure regulator can be installed upstream or downstream of the double solenoid valve depending on the task.

FRI.../6 mounting set to DMV.../11

Order No. 219 967
FRI 705 - 707/6 to DMV 507/11

Order No. 219 968
FRI 710-712/6 to DMV 512/11-520/11

Information on system accessories

VPS 504 valve proving system

Pressure regulator with integrated FRI gas filter

Pressure limiter ÜB, NB...A2 for multiple actuators

Compact pressure switch for multiple actuators GW…A5

K01/1 closed position signal contact to monitor closed position of valves

⚠ If a system accessory is added, it may not be possible to mount further devices.

Double solenoid valve
Flow diagram
Rp 3/8 - Rp 2
nominal diameters

DMV-D/11
DMV-DLE/11

DUNGS®
Combustion Controls

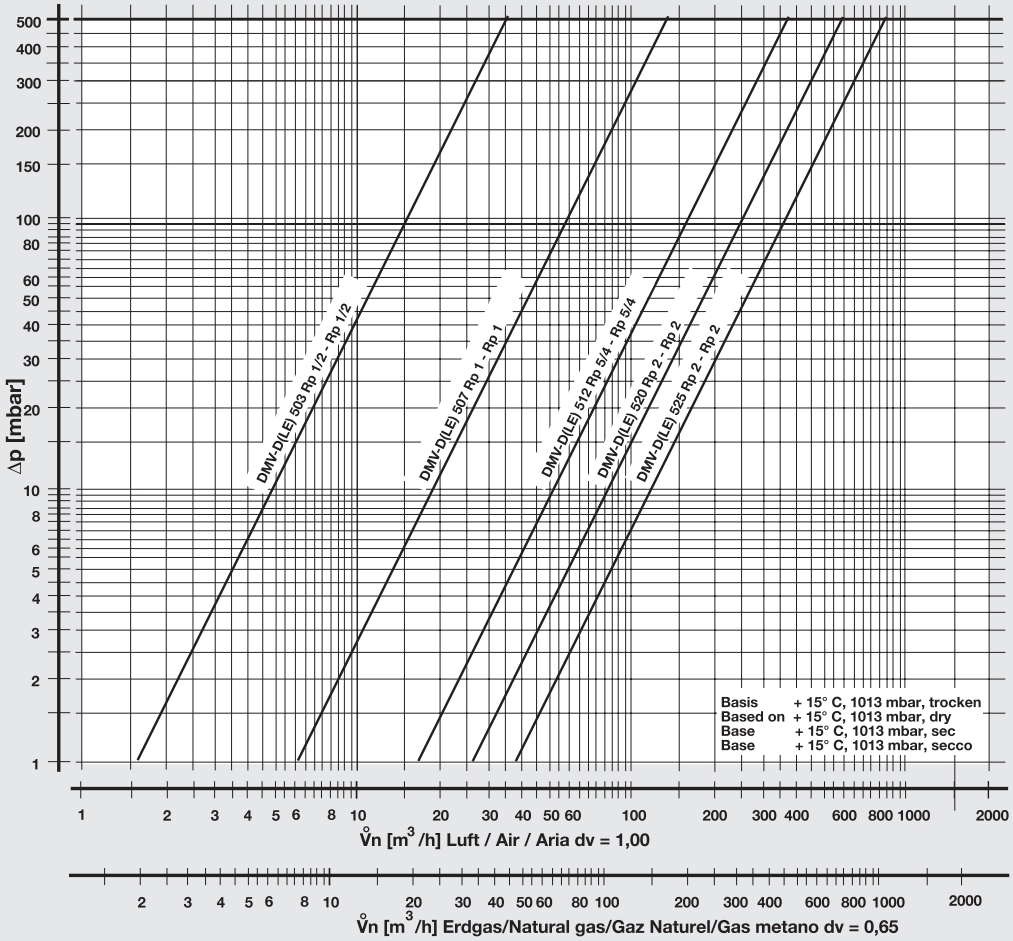

$$f = \sqrt{\frac{\text{Dichte Luft / Spec. weight air / poids spécifique de l'air / peso specifico aria}}{\text{Dichte des verwendeten Gases / Spec. weight of gas used / poids spécifique du gaz utilisé / peso specifico del gas utilizzato}}}$$

Gas type	Density [kg/m³]	dv	f
Nat. gas	0.81	0.65	1.24
City gas	0.58	0.47	1.46
LPG	2.08	1.67	0.77
Air	1.24	1.00	1.00

$$\mathring{V}_{\text{verwendetes Gas/gas used/ gaz utilisé/gas utilizzato}} = \mathring{V}_{\text{Luft/air/air/aria}} \times f$$

We reserve the right to make any changes in the interest of technical progress.

Head Offices and Factory
Karl Dungs GmbH & Co. KG
Karl-Dungs-Platz 1
D-73660 Urbach, Germany
Telephone +49 (0)7181-804-0
Fax +49 (0)7181-804-166

Postal address
Karl Dungs GmbH & Co. KG
Postfach 12 29
D-73602 Schorndorf, Germany
e-mail info@dungs.com
Internet www.dungs.com

Gtksnab
Оборудование для жизни

Мы ценим каждого клиента и предлагаем широкий ассортимент продукции. Оборудование соответствует всем директивам безопасности и имеет необходимые лицензии. Быстрая доставка по всей России и СНГ. Самовывоз со склада в Москве. Квалифицированные специалисты всегда готовы проконсультировать и помочь подобрать нужные запчасти. Доверьтесь нашему многолетнему опыту и надежности поставок! Интернет-магазин "Gtksnab".

Остались вопросы?
Нужно подобрать или заказать деталь?

Email
order@gtksnab.ru

Телефон
+7 (495)131-57-49

Whatsapp
+7(985) 991-80-53

Telegram
@gtksnab

Сайт
gtksnab.ru