# GasMultiBloc®
# Combined regulator and safety shut-off valves
# Two-stage function

## MB-ZRD(LE) 415 - 420 B01

**7.26**

DUNGS®
Combustion Controls

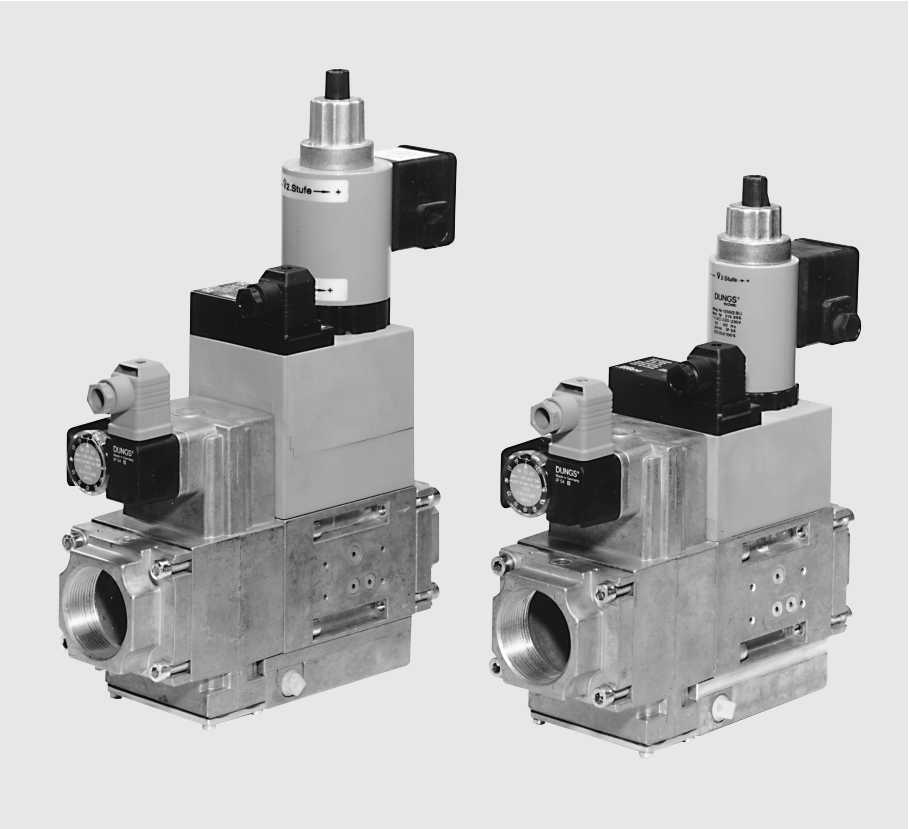

**Technical description**
The DUNGS GasMultiBloc® integrates filter, regulator, valves and pressure switches in one compact fitting.

- Dirt trap: microfilter
- One regulator and two main valves: B01
- One one-stage valve and one two-stage valve
- One valve is fast opening, one valve is slow or fast opening
- Solenoid valves up to 360 mbar (36 kPa) as per DIN EN 161 Class A Group 2
- Sensitive setting of output pressure by proportional regulator as per DIN EN 88 Class A Group 2
- High flow rates with low pressure drop
- DC solenoid drive interference degree N
- Main volume restrictor and partial volume restrictor at valve V2
- Hydraulic opening delay
- Flange connections with pipe threads as per ISO 7/1
- Simple mounting, compact, light-weight

The modular system permits individual solutions by using external ignition gas tap in connection with separately controlled valves, by adding a valve proving system, mini/maxi pressure switches, pressure limiters, limit switch at valve V2.

**Application**
The modular system permits individual solutions in gas safety and regulator engineering. Suitable for gases of families 1, 2, 3 and other neutral gaseous media.

**Approvals**
EC type testing certificate as per:
- EC-Gas Appliances Regulation
- EC-Pressure Equipment Directive

Approvals in other important gas consuming countries.

Printed in Germany • Edition 01.18 • Nr. 225 664

**Functional description of gas flow**

1. When the valves V1 and V2 are closed, chamber A is under inlet pressure.
2. A hole D in the filter housing connects min. pressure switch with chamber A. If the inlet pressure applied to the pressure switch exceeds the incoming reference value, it switches through to the automatic burner control.
3. After release by the automatic burner control, valves V1 and V2 open. The gas flows through chambers A, B and C of the GasMultiBloc.
4. On request, the second stage of valve V2 opens.

**Operating method of valve-regulator combination on valve V1**

A regulator, compensating for residual pressure is integrated in valve V1 (pressure regulating part). Armature 8 is not connected to valve plate unit 3. When it opens, armature 8 pretensions compression spring (V1) 5 and releases the valve plate unit. When the valve closes, the armature acts directly on the valve plate unit. The output pressure upstream of valve V2 is defined by pretensioning regulating spring 7 (tension spring) via setting screw 18.

The output pressure acts via opening E on the working diaphragm 22 of the regulator part. In regulated state, setting spring inlet pressure and pressure of working diaphragm are in force equilibrium.

The compensating diaphragm 23 ensures the fast closing function of valve V1 and a high regulating quality.

**Operating method of valve V2**

Armature 14 of valve V2 is connected to valve plate unit 11. When it opens, armature 14 pretensions closing spring 13. The valve opening of stage 1 can be set by limiting the armature stroke by means of main volume restrictor 19.

**Min. opening (residual stroke) of valve (0.5 to 1.0 mm)**

If the second stage of valve 2 opens, closing spring 13 is continuously pretensioned. The maximum valve opening of stage 2 can be set by limiting the armature stroke of armature 16 by means of the main volume restrictor. Main volume restrictor 20 is set by rotating the adjusting plate or the hydraulic brake. The fast and/or slow opening characteristic acts on both stages. It is influenced by setting the fast stroke at the hydraulic brake under the cover.

**Closing function**

When the supply voltage to the solenoid coils of valves V1 and V2 is interrupted, they are closed within < 1 s by the compression springs.

## Sectional drawing of MB-ZRDLE...

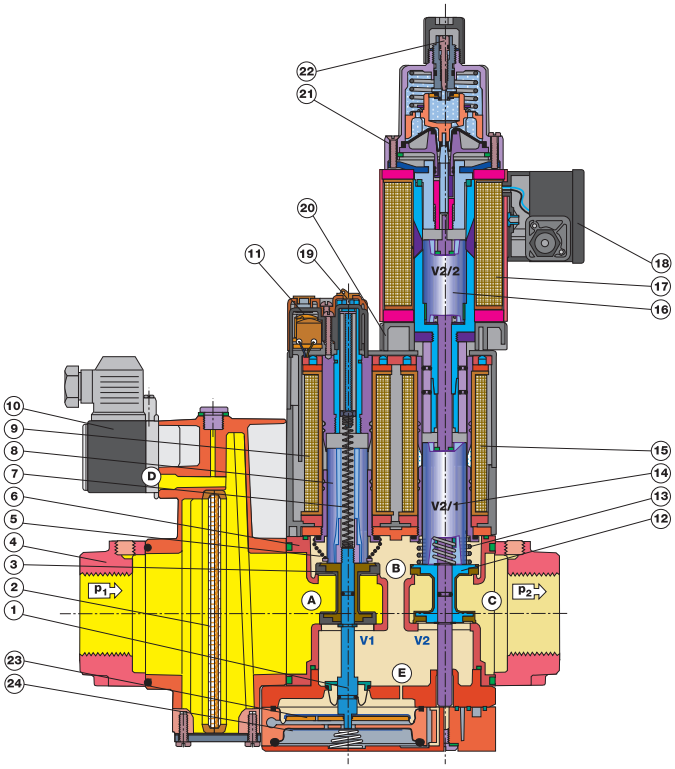


| | | | | | |
|---|---|---|---|---|---|
| 1 | Pressure regulator | 10 | Gas pressure switch | Setting: | |
| 2 | Microfilter | 11 | Electrical connection | 19 | - Gas pressure $p_a$ |
| 3 | Valve V1 | 12 | Valve V2 | 20 | - Partial volume, 1st stage |
| 4 | Connection flange | 13 | Closing spring V2 | 21 | - Main volume |
| 5 | Closing spring V1 | 14 | Armature V2 (1st stage) | 22 | - Fast stroke |
| 6 | Housing | 15 | Solenoid V2 (1st stage) | 23 | Working diaphragm |
| 7 | Regulating spring | 16 | Armature V2 (2nd stage) | 24 | Compensation diaphragm |
| 8 | Armature V1 | 17 | Solenoid V2 (2nd stage) | | |
| 9 | Solenoid V1 | 18 | Electrical connection | | |

## Pressure taps

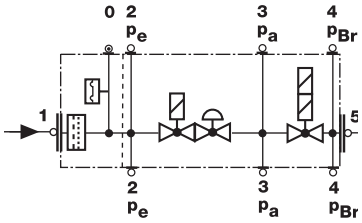


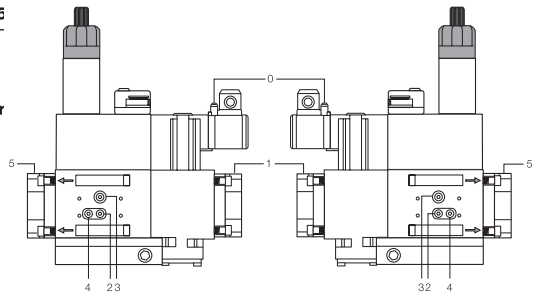

**0, 1, 2, 3, 4, 5**
G 1/8 screw plug

## Electrical connection

**S 20/S 50**

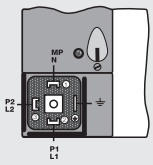

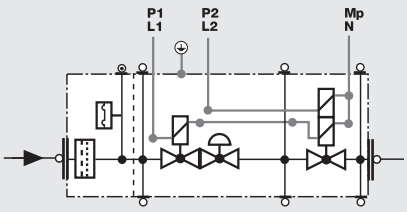


**S 22/S 52**

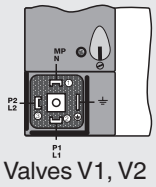

Valves V1, V2
1st stage

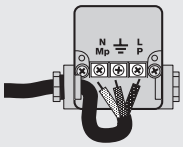

Valve V2
2nd stage

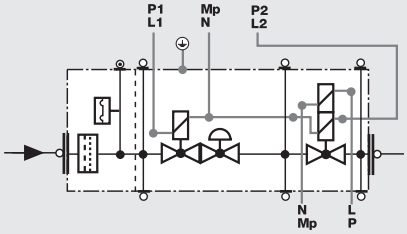

## Specifications

| | | |
|---|---|---|
| Nominal diameters<br>Flange with pipe threads as per ISO 7/1 (DIN 2999) | MB-ZR…415 B01<br>Rp 1, 1 1/4, 1 1/2, 2<br>and their combinations | MB-ZR…420 B01<br>Rp 1, 1 1/4, 1 1/2, 2<br>and their combinations |
| **Max. operating pressure** | **360 mbar (36 kPa)** | |
| **Output pressure ranges** | **MB-ZR… S20/S22 $p_a$: 4 mbar (0.4 kPa) to 20 mbar (2 kPa)**<br>**MB-ZR… S50/S52 $p_a$: 20 mbar (2 kPa) to 50 mbar (5 kPa)** | |
| Media | Gases of families 1, 2, 3 and other neutral gaseous media | |
| Ambient temperature | -15 °C to +70 °C (Do not operate MB-ZR below 0 °C in liquid gas systems. Only suitable for gaseous liquid gas, liquid hydrocarbons destroy sealing materials.) | |
| Dirt trap | Sieve, microfilter, changing the filter is possible without removing the valve. | |
| Pressure switches | Types GW…A5, ÜB…A2 / NB…A2 to DIN EN 1854 may be attached.<br>For further information, refer to Datasheets 5.02 and 5.07 “Pressure Switches for DUNGS Multiple Actuators” | |
| Pressure regulator | Pressure regulator compensated for residual pressure, leakproof seal when switched off by means of valve V1 as per DIN EN 88 Class A.<br>Setpoint spring permanently installed (no spring exchange possible). A vent line above roof is not required. Internal pulse tap provided. | |
| Solenoid valve V1 | Valve as per DIN EN 161 Class A Group 2, fast closing, fast opening | |
| Solenoid valve V2 | Valve as per DIN EN 161 Class A Group 2, fast closing | |

| | Valve V2 design | Partial volume restrictor | Main volume restrictor |
|---|---|---|---|
| MB-ZR | fast opening | with | without |
| MB-ZRD | fast opening | with | with |
| MB-ZRDLE | slowly opening | with | with |
| MB-ZRLE | slowly opening | with | without |

| | | |
|---|---|---|
| Measuring / Ignition gas connection | For G 1/8 as per DIN ISO 228, refer on page 4 | |
| Burner pressure monitor $p_{Br}$ | Connection downstream of valve V2, pressure switch mountable on adapter laterally | |
| Voltage / Frequency | 50 - 60 Hz, 220 - 230 V AC, -15 % +10 %<br>Other preferred voltages: 240 VAC, 110 - 120 VAC, 48 VDC, 24 - 28 VDC | |
| Electrical connection | Plug connection as per DIN EN 175301-803<br>for valves and pressure switches | |
| Rating / Power consumption<br>Switch-on duration<br>Degree of protection<br>Radio interference | Refer to Dimensions on page 5<br>100 %<br>IP 54 as per IEC 529 (EN 60529)<br>Interference degree N | |
| Materials of gas conveying parts | Housing<br>Diaphragms, seals<br>Solenoid drive | aluminium die casting<br>NBR basis, Silopren (silicone rubber)<br>steel, brass, aluminium |
| Installation position | Solenoid vertically upright or lying horizontally as well as its intermediate positions. | |
| Closed position signal contact | Closed position signal contact, type K01/1 (DIN-tested), mountable to V2 | |

| Equipment variants GasMultiBloc®...B01 Two-stage function | 415 B01 | 420 B01 | |
|---|---|---|---|
| MB-ZR | • | • | |
| MB-ZRD | • | • | |
| MB-ZRDLE | • | • | |
| MB-ZRLE | • | • | |
| Microfilter (standard) with sieve | • | • | Filter element can be removed. A suitable GF.../1 gas filter must then be fitted upstream. |
| Gas pressure switch downstream of filter | • | • | |
| downstream of valve V2 on adapter laterally | • | • | |
| Pressure regulator | • | • | |
| Valve V1, double seat | • | • | |
| Valve V2, double seat | • | • | |
| Valves opening together | • | • | S 20, S 50 |
| Valves opening separately | • | • | S 22, S 52 |
| Flange Rp 1 | • | • | • = possible |
| Rp 1 1/4 | • | • | (•) = on request |
| Rp 1 1/2 | • | • | - = not possible |
| Rp 2 | • | • | |

**MB-ZR...B01 design**

**V1 = Valve 1**
**V2 = Valve 2**
**3 = Filter**
**4 = Pressure switch**
**5 = Regulator**

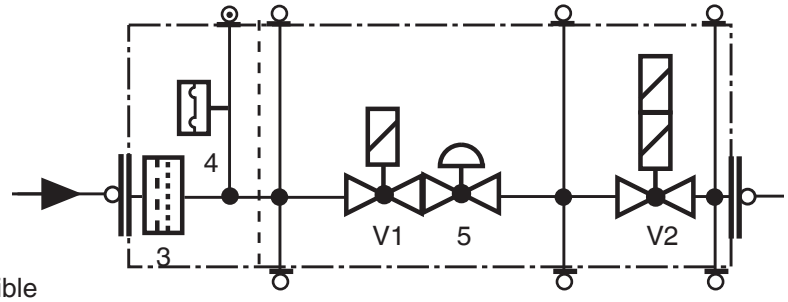


Mounting of VPS 504 valve proving system possible
Mounting of K01/1 closed position signal contact possible

**Type key of MultiBloc®**

**MB- XX XXX XX BOX SXX**

**Control of V1 and V2**
0 = common
2 = separated

**Outlet pressure** / **Inlet pressure**
2 = 4 - 20 mbar / up to 360 mbar
5 = 20 - 50 mbar / up to 360 mbar

**S = Series (type-independent)**

**Gas train schematic diagram**
1 = two A valves for main gas + regulator
7 = two A valves for main gas, one A valve together with V1 as internal bypass around V2 + regulator

**Design type (generation) B**

**Construction size, nominal diameter**
403 = DN 10, V2 = Single-seat valve
405 = DN 15, V2 = Single-seat valve
407 = DN 20, V2 = Double-seat valve
410 = DN 25, V2 = Single-seat valve
412 = DN 32, V2 = Double-seat valve
415 = DN 40, V2 = Double-seat valve
420 = DN 50, V2 = Double-seat valve

**Opening behaviour + main volume restrictor**
without = (MB or MB-ZR)
-D = Main volume restrictor
-LE = adjustable opening behaviour
-DLE = D + LE combination

without = single stage
ZR = double-stage with partial volume setting first stage

**MultiBloc**

**Dimensions [mm]**

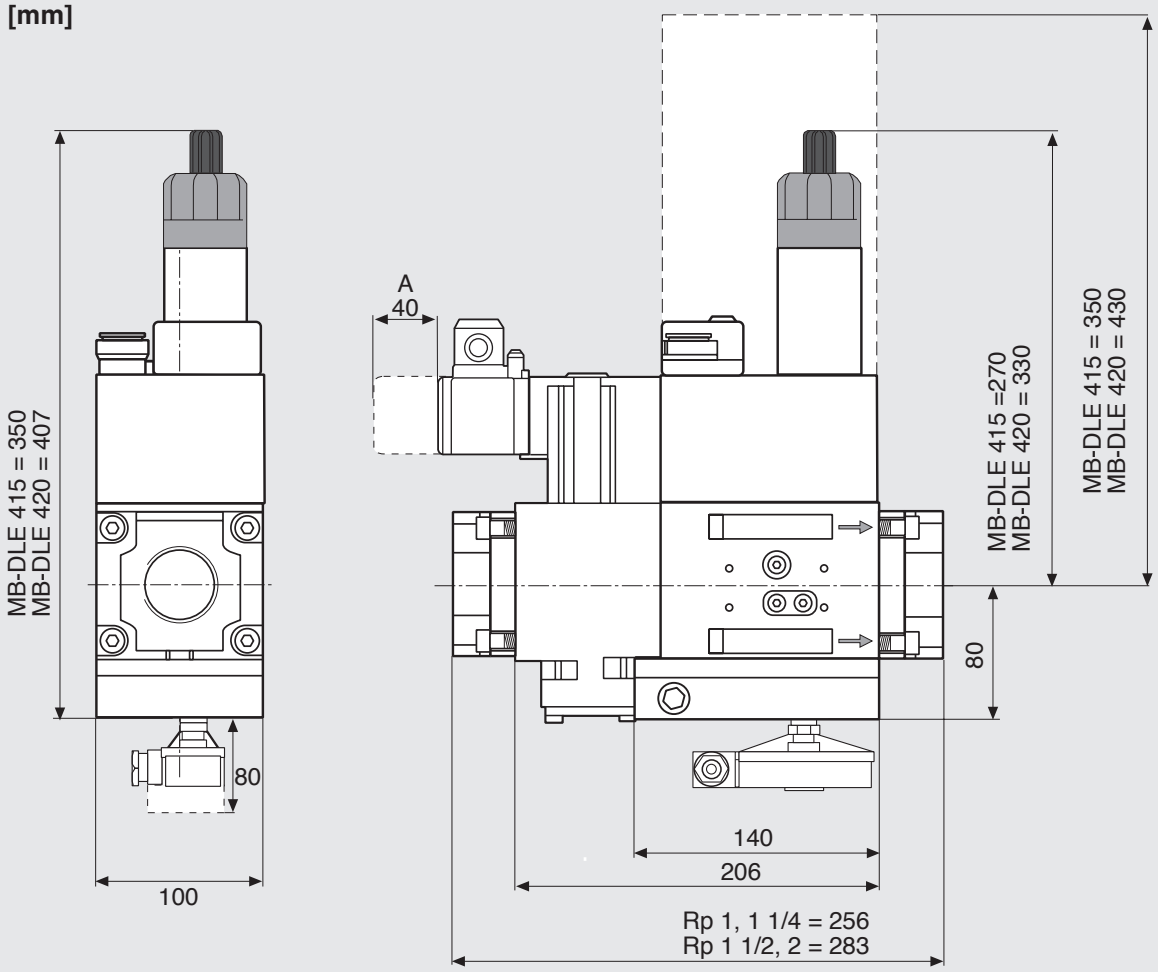


| Type | Rp | Opening time | Nominal rating [VA] 230 V AC; +20 °C | | | | Weight [kg] |
|---|---|---|---|---|---|---|---|
| | | | S20 | S50 | S22 | S52 | |
| **MB-ZRD 415 B01** | Rp 1 - 2 | < 1 s | 80 | 80 | 120 | 120 | 8.0 |
| **MB-ZRDLE 415 B01** | Rp 1 - 2 | < 20 s | 80 | 80 | 120 | 120 | 8.1 |
| **MB-ZRD 420 B01** | Rp 1 - 2 | < 1 s | 115 | 115 | 135 | 135 | 10,1 |
| **MB-ZRDLE 420 B01** | Rp 1 - 2 | < 20 s | 115 | 115 | 135 | 135 | 10.2 |

**GasMultiBloc®**
**Combined regulator and safety shut-off valves**
**Two-stage function**

**MB-ZRD(LE) 415 - 420 B01**

DUNGS®
Combustion Controls

## Volumetric flow pressure loss characteristics in regulated state with microfilter

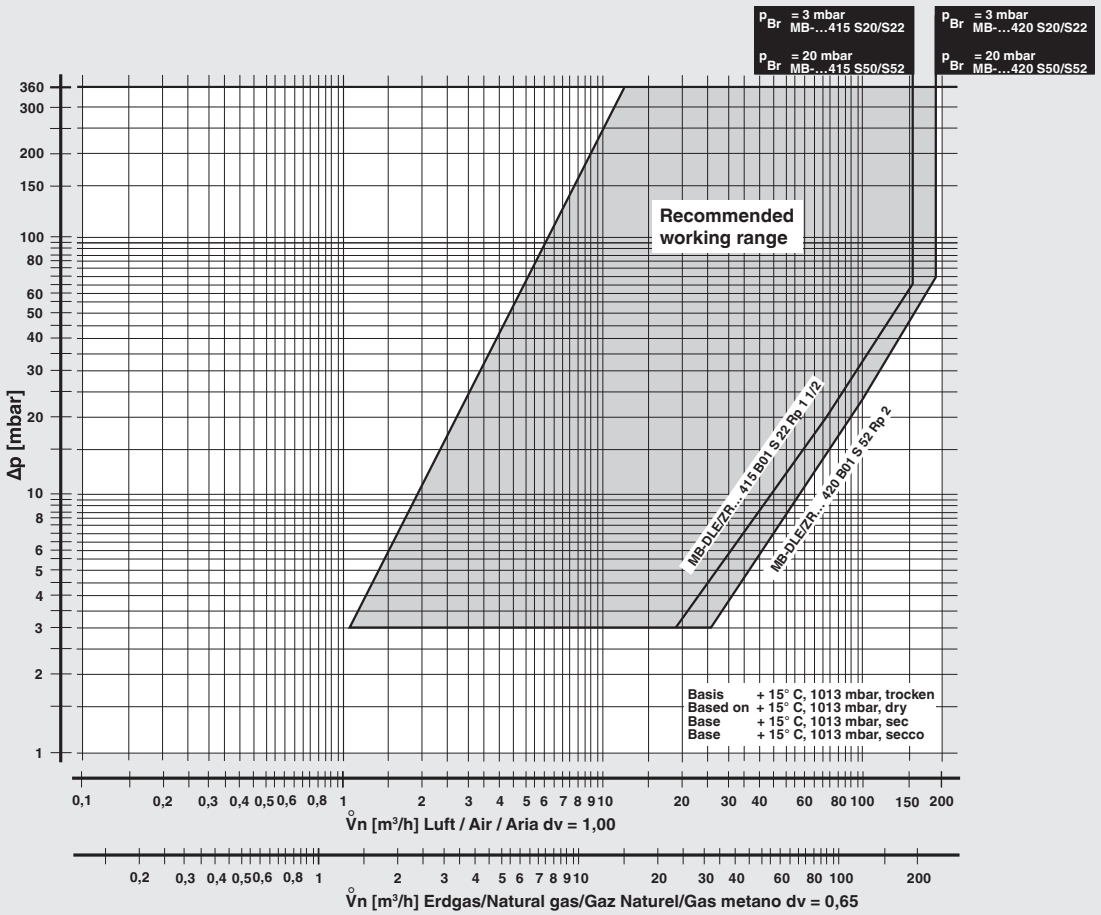


$$f = \sqrt{\frac{\text{Dichte Luft / Spec. weight air / poids spécifique de l'air / peso specifico aria}}{\text{Dichte des verwendeten Gases / Spec. weight of gas used / poids spécifique du gaz utilisé / peso specifico del gas utilizzato}}}$$

| Gas type | Density [kg/m³] | dv | f |
|---|---|---|---|
| Nat. gas | 0.81 | 0.65 | 1.24 |
| City gas | 0.58 | 0.47 | 1.46 |
| LPG | 2.08 | 1.67 | 0.77 |
| Air | 1.24 | 1.00 | 1.00 |

$$\mathring{V}_{\text{verwendetes Gas/gas used/ gaz utilisé/gas utilizzato}} = \mathring{V}_{\text{Luft/air/aria}} \times f$$

We reserve the right to make any changes in the interest of technical progress.


**Head Offices and Factory**
**Karl Dungs GmbH & Co. KG**
**Karl-Dungs-Platz 1**
**D-73660 Urbach, Germany**
**Telephone +49 (0)7181-804-0**
**Fax +49 (0)7181-804-166**

**Postal address**
**Karl Dungs GmbH & Co. KG**
**Postfach 12 29**
**D-73602 Schorndorf, Germany**
**e-mail info@dungs.com**
**Internet www.dungs.com**

Gtksnab
Оборудование для жизни

Мы ценим каждого клиента и предлагаем широкий ассортимент продукции. Оборудование соответствует всем директивам безопасности и имеет необходимые лицензии. Быстрая доставка по всей России и СНГ. Самовывоз со склада в Москве. Квалифицированные специалисты всегда готовы проконсультировать и помочь подобрать нужные запчасти. Доверьтесь нашему многолетнему опыту и надежности поставок! Интернет-магазин "Gtksnab".

## Остались вопросы?
## Нужно подобрать или заказать деталь?


Email
order@gtksnab.ru

Телефон
+7 (495)131-57-49

Whatsapp
+7(985) 991-80-53

Telegram
@gtksnab

Сайт
gtksnab.ru