Single-stage safety solenoid valves

MV/4
MVD, MVD/5,
MVDLE/5

DUNGS®
Combustion Controls

6.20

Technical description

The DUNGS safety solenoid valve MV/4, MVD, MVD/5, MVDLE/5 is a single-stage automatic shut-off valve as per EN 161 for gas burners and gas appliance.

- Max. operating pressure up to 200, 360 or 500 mbar (20, 36 or 50 kPa)
- normally closed
- MV, MVD: fast opening
- MVDLE: Slow opening with adjustable fast stroke for start gas volume
- Main volume adjustable (MVD/MVDLE)
- DC solenoid, rectifier wiring with radio interference suppression in terminal box with PG screw union
- Mountable closed position signal contact to monitor closed position of valve (.../5)
- Pipe thread as per ISO 7/1
- Flange connection as per DIN EN 1092-1
- Reliable function, rugged and maintenance-free
- On request, design without non-ferrous metals

Application

The solenoid valve is used for securing, limiting, shutting off and releasing gas supply to gas burners and gas appliances.
MV/4 Range of application: for large breaking capacities, e.g. pulsed firing.
The DUNGS safety solenoid valve MV... is suitable for gases of families 1, 2, 3 and other neutral gaseous media.

Approval

EC type testing certificate as per:

- EC-Gas Appliances Regulation
- EC-Pressure Equipment Directive

Approvals in other important gas consuming countries.
Special designs for the North American market with U_L, FM and CSA registrations.

Printed in Germany • Edition 11.18 • Nr. 214 756

MV/4, MV/5	Single-stage solenoid valve, normally when closed, fast opening, fast closing.
MVD/5	Single-stage solenoid valve, normally when closed, fast opening, fast closing, manual limitation of flowing gas volume by adjusting main volume.
MVDLE/5	One-stage solenoid valve, normally when closed, slow opening, fast closing. Opening time adjustment with fast stroke range. Main volume adjustment.

Specifications

Nominal diameters Pipe thread as per ISO 7/1, Rp Flange	10 15 20 25 40 50 65 80 100 125 150 3/8 1/2 3/4 1 1 1/2 2 2 1/2 Connection flange (PN 16) as per DIN EN 1092-1
Max. operating pressure	up to 200 mbar (20 kPa), 360 mbar (36 kPa) or up to 500 mbar (50 kPa) - refer to type overview
Solenoid valve	Valve as per EN 161, Class A, Group 2, single-stage mode
Closing time	< 1 s
Opening time	< 1 s for MVDLE approx. 20 s at room temperature 20 °C and without fast stroke
Fast stroke	Adjustable
Main volume adjustment	Manually adjustable on MVD and MVDLE
Materials of gas-conveying parts	Housing: aluminium, steel, brass Seals: NBR basis
Voltage/frequency	230 V AC (+10 % -15 %); 50-60 Hz - other voltages on request Solenoids 60E, 61E in 24-28 VDC external activation of solenoid coils required, see operating and mounting instructions
Rating / power consumption	Refer to type overview
Switch-on duration	100 %
Degree of protection	IP 54, IP 65 on request
Electrical connection	At screw terminals via PG* 11 cable gland (* = heavy-gauge conduit thread) Plug connection as per DIN 175 0301-803 can be retrofitted
Switching rate	MV/4, MVD…/5: max. 1000/h MVDLE…/5: max. 100/h MVD 2125/5, MVD 2150/5, MVD 5100/5, MVD 5125/5, MVD 5150/5: max. 20/h MV 5125/5 S, MV 5150/5 S: max. 20/h
Measuring/ignition gas connection	G 1/4 ISO 118, on both sides in inlet section, additionally G 3/4 on input side, form size DN 40 (flange) upwards
Dirt trap	Sieve installed, mesh width 1 mm
Ambient temperature	-15 °C to +60 °C
Installation position	Solenoid from vertically upright to horizontally lying
Closed position signal contact	MV/5, MVD/5, MVDLE/5: Type K01/1, DIN-tested, mountable on DN 10 - DN 150
Valve proving system	Type VDK 200 A S02, mountable via G 1/4 test connection, Type VPS 504, mountable with adapter up to DN 80
Accessories	K01 closed position signal contact, see Datasheet 12.01 211 202 Equipment plug for line socket, DIN 175301-803 215 733

Type	$p_{max.}$	DN / Rp	Sole-noid No.	Order No. Made in Germany	Order No. Made in China	$P_{max.}$ [VA]	$I_{max.}$ ~ (AC) 230 V	Ope-ning time	Dimensions [mm] ø a	b	c	d	e	f	Order No. [kg]
MV 205/4	200	Rp 1/2	100	251 279*		15	0,08	< 1 s	50	80	90	75	113	150	1,00
MV 207/4	200	Rp 3/4	200	251 280*		25	0,15	< 1 s	75	100	135	85	160	200	1,75
MV 210/4	200	Rp 1	200	251 281*		25	0,15	< 1 s	75	100	135	90	165	200	2,45
MV 215/4	200	Rp 1 1/2	300	251 282*		60	0,26	< 1 s	95	150	170	116	215	260	4,3
MV 220/4	200	Rp 2	300	251 283*		60	0,30	< 1 s	95	170	175	130	225	265	5,90
MVD 203/5	360	Rp 3/8	100	108 571*		15	0,08	< 1 s	50	60	90	60	113	140	0,85
MVD 205/5	360	Rp 1/2	100	013 102*	270 486**	15	0,08	< 1 s	50	80	90	75	113	150	1,00
MVD 207/5	360	Rp 3/4	200	121 962*	270 487**	25	0,15	< 1 s	75	100	135	85	160	200	2,40
MVD 210/5	360	Rp 1	200	013 490*	270 488**	25	0,15	< 1 s	75	110	135	90	165	200	2,45
MVD 215/5	200	Rp 1 1/2	280	015 446*	270 489**	60	0,26	< 1 s	80	150	170	116	215	255	4,30
MVD 215/5	360	Rp 1 1/2	300	121 977*		60	0,30	< 1 s	95	150	170	116	215	260	5,40
MVD 220/5	200	Rp 2	300	011 767*	270 490**	60	0,30	< 1 s	95	150	170	116	215	260	5,90
MVD 225/5	200	Rp 2 1/2	400	119 701*		100	0,48	< 1 s	115	230	220	165	215	325	10,90
MVDLE 203/5	360	Rp 3/8	100	108 597*		15	0,08	ca. 20 s	50	60	135	75	155	190	0,95
MVDLE 205/5	360	Rp 1/2	100	013 284*	271 211**	15	0,08	ca. 20 s	50	80	135	75	155	200	1,10
MVDLE 207/5	360	Rp 3/4	200	013 276*	271 212**	25	0,15	ca. 20 s	75	100	165	85	190	190	2,55
MVDLE 210/5	360	Rp 1	200	013 524*	271 213**	25	0,15	ca. 20 s	75	110	165	90	200	190	2,75
MVDLE 215/5	200	Rp 1 1/2	280	015 412*	270 502**	60	0,26	ca. 20 s	80	150	205	116	245	255	4,40
MVDLE 215/5	360	Rp 1 1/2	300	122 002*		60	0,30	ca. 20 s	95	150	205	116	245	255	5,50
MVDLE 220/5	200	Rp 2	300	011 775*	270 503**	60	0,30	ca. 20 s	95	170	205	130	250	255	6,20
MVDLE 225/5	200	Rp 2 1/2	400	118 935*		100	0,48	ca. 20 s	115	230	295	165	350	320	11,40
MVD 503/5	500	Rp 3/8	100	158 090*		15	0,08	< 1 s	50	60	90	60	113	140	0,85
MVD 505/5	500	Rp 1/2	100	158 110*	270 491**	15	0,08	< 1 s	50	80	90	75	113	150	1,00
MVD 507/5	500	Rp 3/4	200	157 530*	270 492**	25	0,15	< 1 s	75	100	135	85	160	200	2,40
MVD 510/5	500	Rp 1	200	157 540*	270 493**	25	0,15	< 1 s	75	110	135	90	165	200	2,45
MVD 515/5	500	Rp 1 1/2	300	157 550*	270 496**	60	0,30	< 1 s	95	150	170	116	215	260	5,40
MVD 520/5	500	Rp 2	400	167 200*	270 498**	100	0,48	< 1 s	115	170	190	130	235	300	8,80
MVD 525/5	500	Rp 2 1/2	500	170 750*		80	0,42	< 1 s	130	230	215	165	300	370	14,50
MVDLE 503/5	500	Rp 3/8	100	222 077*		15	0,08	ca. 20 s	50	60	135	75	155	190	0,80
MVDLE 507/5	500	Rp 3/4	200	222 079*	271 193**	25	0,15	ca. 20 s	75	100	165	85	190	190	2,50
MVDLE 515/5	500	Rp 1 1/2	300	222 081*	271 195**	60	0,30	ca. 20 s	95	150	205	116	245	255	5,60
MVDLE 520/5	500	Rp 2	400	222 082*	271 196**	100	0,48	ca. 20 s	115	170	230	135	270	300	11,10
MVD 2040/5	200	DN 40	280	111 146*		60	0,26	< 1 s	80	200	170	150	235	255	6,80
MVD 2040/5	360	DN 40	300	119 906*		60	0,30	< 1 s	95	200	170	150	235	255	7,00
MVD 2050/5	200	DN 50	300	111 187*		60	0,30	< 1 s	95	230	171	165	245	255	7,70
MVD 2065/5	200	DN 65	400	169 390*		100	0,48	< 1 s	115	290	221	185	315	330	12,70
MVD 2080/5	200	DN 80	500	169 400*		80	0,42	< 1 s	130	310	250	200	340	375	18,50
MVD 2100/5	200	DN 100	550	169 410*		100	0,48	< 1 s	150	350	310	240	410	480	31,00
MVDLE 2040/5	200	DN 40	280	111 914*		60	0,26	ca. 20 s	80	200	205	150	270	255	6,90
MVDLE 2040/5	360	DN 40	300	111 153*		60	0,30	ca. 20 s	95	200	205	150	270	255	7,10
MVDLE 2050/5	200	DN 50	300	111 195*		60	0,30	ca. 20 s	95	230	210	165	280	255	7,50
MVDLE 2065/5	200	DN 65	400	170 930*		100	0,48	ca. 20 s	115	290	290	190	385	330	13,30
MVDLE 2080/5	200	DN 80	500	170 940*		80	0,42	ca. 20 s	130	310	320	200	405	375	18,50
MVDLE 2100/5	200	DN 100	550	170 950*		100	0,48	ca. 20 s	150	350	380	240	480	480	31,00
MVD 5040/5	500	DN 40	300	170 660*		60	0,30	< 1 s	95	200	170	150	255	255	7,00
MVD 5050/5	500	DN 50	400	170 690*		100	0,48	< 1 s	115	230	190	165	295	295	12,00
MVD 5065/5	500	DN 65	500	165 510*		80	0,42	< 1 s	130	290	245	190	370	370	17,00
MVD 5080/5	500	DN 80	550	165 640*		100	0,50	< 1 s	150	310	295	200	465	465	27,00
MVDLE 5040/5	500	DN 40	300	222 086*		60	0,30	ca. 20 s	95	230	205	150	255	255	7,00
MVDLE 5050/5	500	DN 50	400	222 087*		100	0,48	ca. 20 s	115	230	230	165	295	295	13,10

f = Space requirement for solenoid changing

d = largest width

1) Solenoids 60E, 61E in 24-28 VDC
external activation of solenoid coils required, see operating and mounting instructions

2) = for max. 3 s

* = PG 11

** = Line socket, black

Dimensions [mm]
MV 205-220/4 *
MVD 203-525/5,
MVDLE 2020/5-2100/5

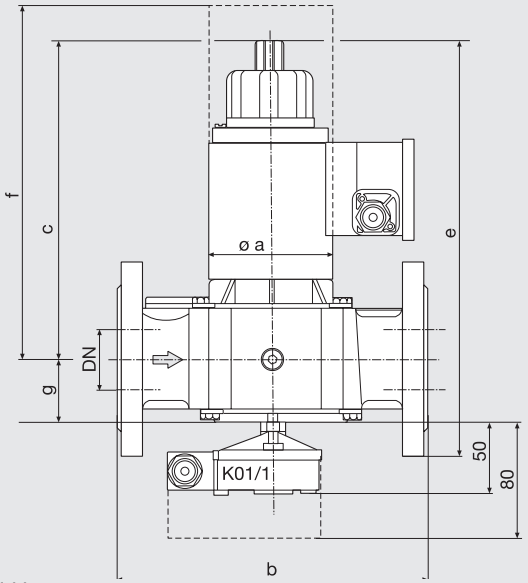

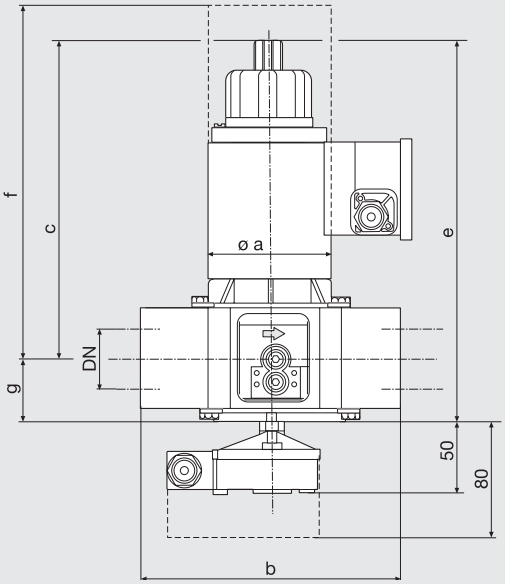

d = largest width
Ignition gas valve, Type MV 502, refer to Datasheet 6.01
* Mounting of a closed position signal contact not possible

Dimensions [mm]
MV 5100/5 - MVD 5150
MV 2125-MV 2150
MV 5125 S
MV 5150 S

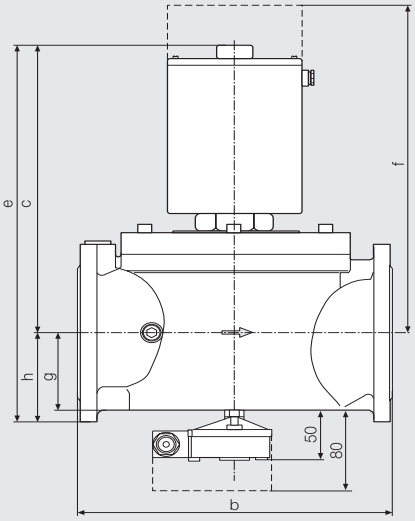

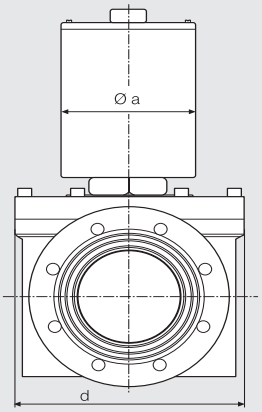

Type	$p_{max.}$	DN / Rp	Order No.	Sole-noid No.	$P_{max.}$ [VA]*	$I_{max.}$ ~(AC) 230 V [A] **	Opening time	Dimensions [mm] a	b	c	d	e	f	g	h	Weight [kg]
MV 5125/5 S	500	DN 125	224 681	60S	90	7.5	< 1 s	170	400	406	290	531	514	112	125	56.0
MV 5150/5 S	500	DN 150	224 682	61S	90	10	< 1 s	170	480	439	290	582	547	125	143	62.0
MVD 5100/5	500	DN 100	160 150	60E [1)]	90	7.5	< 1 s	170	350	365	290	465	498	80	100	39.0
MVD 2125/5	200	DN 125	159 830	60E [1)]	90	7.5	< 1 s	170	400	406	290	531	514	112	125	56.0
MVD 5125/5	500	DN 125	159 840	60E [1)]	90	7.5	< 1 s	170	400	406	290	531	514	112	125	56.0
MVD 2150/5	200	DN 150	160 050	61E [1)]	90	10	< 1 s	170	480	439	290	582	547	125	143	62.0
MVD 5150/5	500	DN 150	160 350	61E [1)]	90	10	< 1 s	170	480	439		582	547	125	143	62.0

* Electrical rating in open state
** Switch-on current for approx. 3 s
[1)] Solenoids 60E, 61E in 24-28 VDC
external activation of solenoid coils required, see operating and mounting instructions

Type MVD…/5 **Type MVDLE/5**

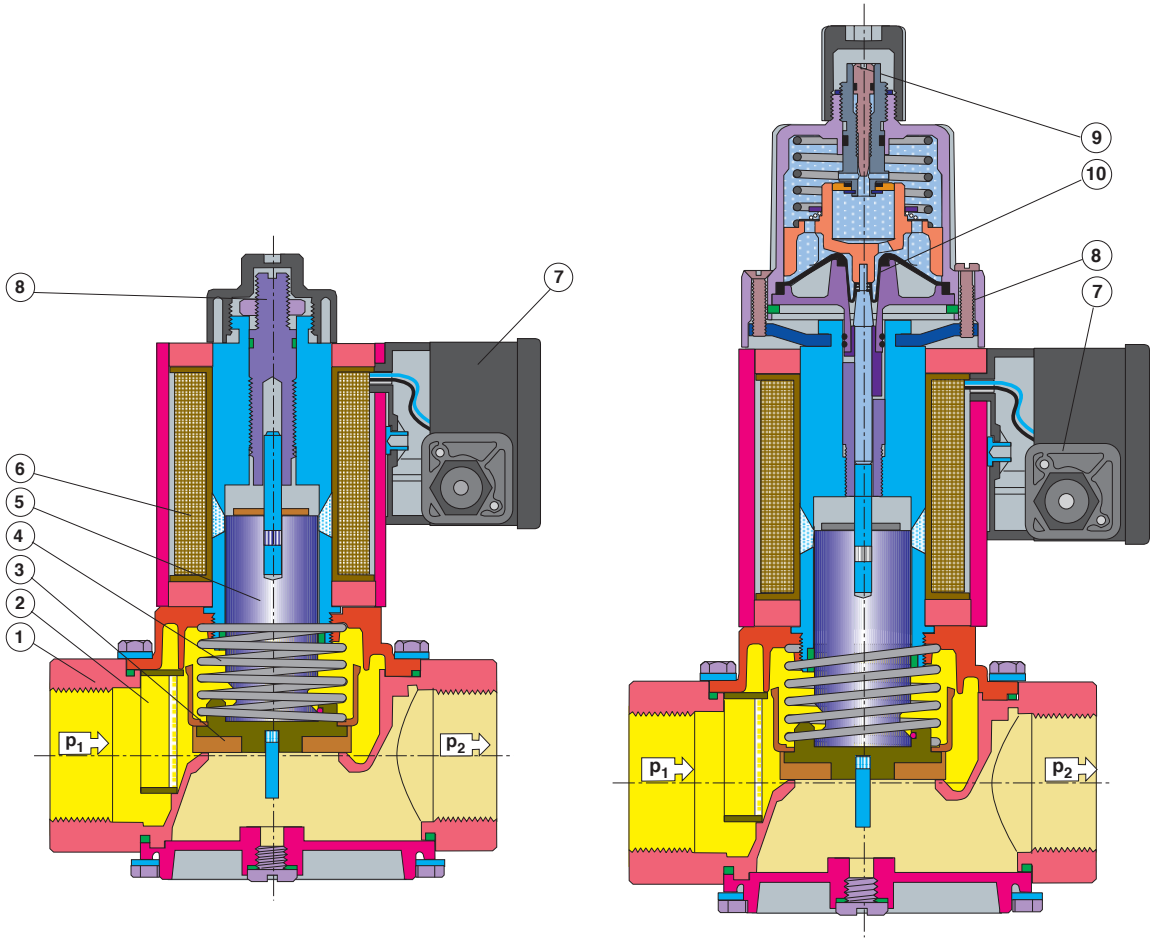

1	Housing	5	Armature		Setting
2	Sieve	6	Solenoid coil	8	- Main volume
3	Valve plate	7	Electrical connection	9	- Fast stroke
4	Closing spring			10	- Hydraulic brake

Functional description

The DUNGS safety solenoid valve is an automatic shut-off valve operated with auxiliary power.
The electromagnetic drive opens against the force of the closing spring 4.

The stroke of armature 5 can be limited by the setting screw 8.
The hydraulic brake 10 permits slow opening. Fast stroke 9 can be adjusted.

If the auxiliary power is interrupted (operating voltage), closing spring 4 closes the valve within 1 second.
The closed position of the valve can be monitored by a mountable closed position signal contact.

$$\mathring{V}_{\text{verwendetes Gas/gas used/ gaz utilisé/gas utilizzato}} = \mathring{V}_{\text{Luft/air/air/aria}} \times f$$

$$f = \sqrt{\frac{\text{Dichte Luft / Spec. weight air / poids spécifique de l´air / peso specifico aria}}{\text{Dichte des verwendeten Gases / Spec. weight of gas used / poids spécifique du gaz utilisé / peso specifico del gas utilizzato}}}$$

Gasart Type of gas Type de gaz Tipo di gas	Dichte Spec. Wgt. poids spécifique Peso specifico [kg/m³]	dv	f
Erdgas/Nat.Gas/ Gaz naturel/Gas metano	0.81	0.65	1.24
Stadtgas/City gas/ Gaz de ville/Gas città	0.58	0.47	1.46
Flüssiggas/LPG/ Gaz liquide/Gas liquido	2.08	1.67	0.77
Luft/Air/ Air/Aria	1.24	1.00	1.00

DUNGS®
Combustion Controls

Flow diagram

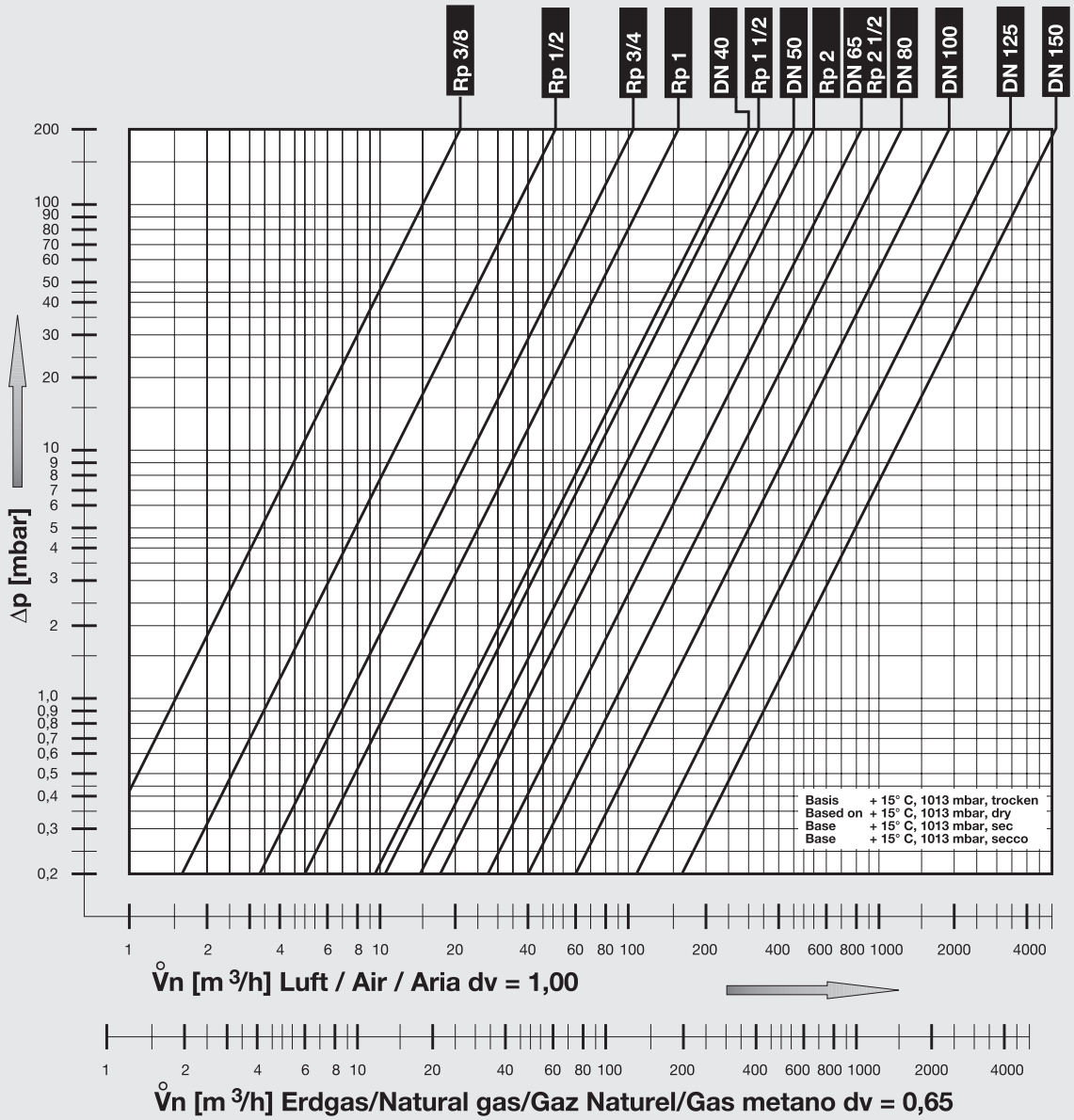

We reserve the right to make any changes in the interest of technical progress.

Head Offices and Factory
Karl-Dungs-Platz 1
D-73660 Urbach, Germany
Telephone +49 (0)7181-804-0
Fax +49 (0)7181-804-166

Postal address
Karl Dungs GmbH & Co. KG
Postfach 12 29
D-73602 Schorndorf, Germany
e-mail info@dungs.com
Internet www.dungs.com

Gtksnab
Оборудование для жизни

Мы ценим каждого клиента и предлагаем широкий ассортимент продукции. Оборудование соответствует всем директивам безопасности и имеет необходимые лицензии. Быстрая доставка по всей России и СНГ. Самовывоз со склада в Москве. Квалифицированные специалисты всегда готовы проконсультировать и помочь подобрать нужные запчасти. Доверьтесь нашему многолетнему опыту и надежности поставок! Интернет-магазин "Gtksnab".

Остались вопросы?
Нужно подобрать или заказать деталь?

Email
order@gtksnab.ru

Телефон
+7 (495)131-57-49

Whatsapp
+7(985) 991-80-53

Telegram
@gtksnab

Сайт
gtksnab.ru