GAS X2/MCE - GAS X3/MCE - GAS X4/MCE

Burners for gas two stages progressive (hi-low flame) or modulating (PID fully modulating) if equipped with addition of optional modulation kit and probe.
They are composed by: fan at high pressurisation, combustion head with adjustment at high efficiency and high flame stability and protection cover with noise reduction plate.
Compact overall dimensions and disposition rationalized of the components with accessibility facilitated for the operations of setting and maintenance.
Available in the versions METHANE (natural gas) or L.P.G. (to specify at the order) on demand specific versions for town gas, coal gas or biogas.
Gas train completely assembled and tested; complete of one-block valve A class (1st stage slow opening + safety), minimum gas pressure switch and filter stabilizer.
Complete of flange and gasket for installation on generator.

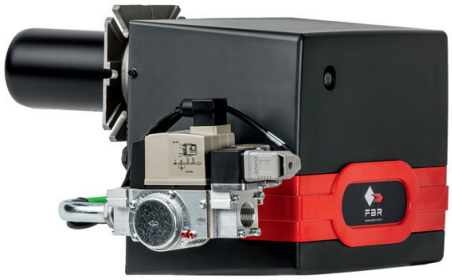

Fig. 1 GAS X2/MCE

Fig. 2 GAS X3/MCE

Fig. 3 GAS X4/MCE

GAS BURNERS TWO STAGES PROGRESSIVE OR MODULATING

TECHNICAL DATA GAS X2/MCE - GAS X3/MCE - GAS X4/MCE

MODEL		GAS X2/MCE	GAS X3/MCE	GAS X4/MCE
Thermal power min. 1°st. / min. 2°st. - max. 2°st. *	[Mcal/h]	15/35-80	30/60-150	40/100-200
Thermal power min. 1°st. / min. 2°st. - max. 2°st. *	[kW]	17/41-93	35/70-174	46/116-232
Gas flow G20 (NATURAL GAS) min. 1°st. / min. 2°st. - max. 2°st. *	[Nm³/h]	1.7/4.1-9.4	3.5/7-17.4	4.6/11.6-23.2
Gas flow G31 (L.P.G.) min. 1°st. / min. 2°st. - max. 2°st. *	[Nm³/h]	0.7/1.6-3.6	1.3/2.7-6.5	1.8/4.5-9
Fuel: NATURAL GAS (second family) - L.P.G. (third family)				
Fuel category:		I2R,I2H,I2L,I2E,I2E+,I2Er,I2ELL, I2E(R) I3B/P,I3+,I3P,I3B,I3R		
Intermitted working operation (min. 1 stop every 24 hours) two stages progressive or modulating				
Environmental conditions operation / storage:		-15...+40°C / -20...+70°C, umidità rel. max. 80%		
Max. temperature combustion air	[°C]	60	60	60
Minimum pressure gas train D3/4"-S NATURAL GAS/L.P.G. **	[mbar]	18/24	-/-	-/-
Minimum pressure gas train D1"-S NATURAL GAS/L.P.G. **	[mbar]	-/-	14/31	14/21
Minimum pressure gas train D1"1/4-S NATURAL GAS/L.P.G. **	[mbar]	-/-	11/29.5	11/19
Minimum pressure gas train D1"1/2-S NATURAL GAS/L.P.G. **	[mbar]	-/-	10/28	8/17
Maximum pressure at the entry of valves (Pe. max)	[mbar]	360	360	360
Nominal electric power	[W]	130	200	226
Fan motor	[W]	75	110	200
Nominal current absorption	[A]	0.6	0.9	1.1
Power supply:		1N~230V - 50Hz		
Electric protection degree:		IP 40	IP 40	IP 40
Noisiness *** min. - max.	[dBA]	61-62	66-71	66-71
Burner weight	[kg]	13	18	20

* Reference conditions: Environment temperature 20°C - Barometric pressure 1013 mbars - Altitude 0 metre (sea level).
** Minimal feeding-gas pressure to the gas train to get the maximum power of the burner, considering counter-pressure in combustion chamber of value 0 (zero).
*** Measured sonorous pressure in the laboratory combustion, with functional burner on beta boiler to 1 metre of distance (UNI EN ISO 3746 law - method of control Class 3 - The tollerance of the measured pressure can be taken equal to ± 1 [dB(A)]).

OPERATING RANGE DIAGRAM

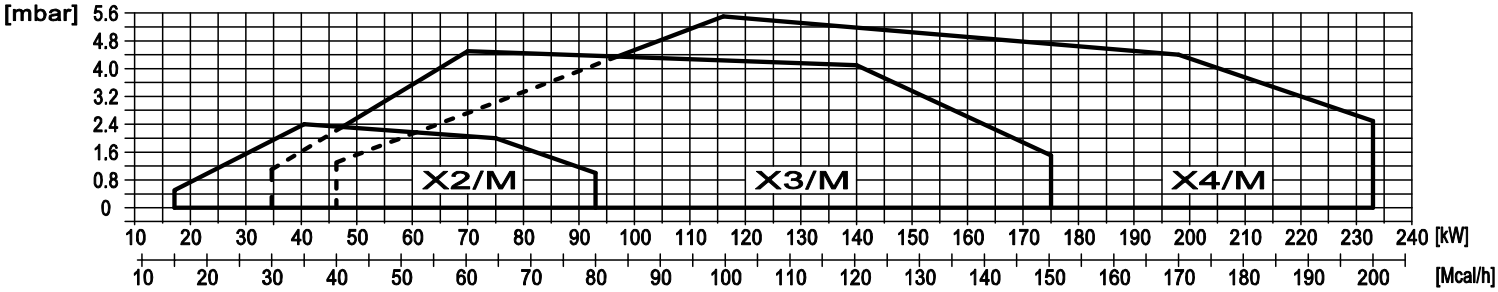

Fig. 4 X = Thermal power Y = Pression in the combustion chamber

The firing rates has been obtained based on test boilers in accordance with EN267 standards and are indicative of matching the burner to the boiler. For the correct operation of the burner, combustion chamber dimensions must be in accordance with current regulation. In case of non-compliance, contact the manufacturer.

DIMENSIONS [MM]

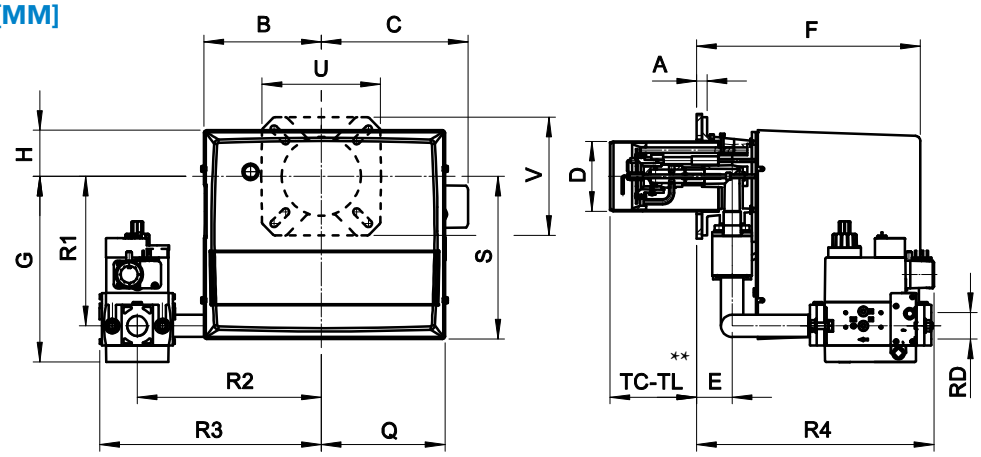

Fig. 5 Dimensions GAS X2/MCE - GAS X3/MCE - GAS X4/MCE

MODEL	A	B	C	D	E	F	G	H	Q	S	U	V	R1	R2	R3	R4	RD	Gas train weight
GAS X2/MCE - D3/4"-S	15	162	200	90	43	305	215	65	170	211	150	150	178	220	262	346	Rp 3/4	2 kg
GAS X3/MCE - D1"-S	20	185	224	107	56	344	268	70	193	248	202	162	212	280	338	300	Rp 1	5,6 kg
GAS X3/MCE - D1"1/4-S	20	185	224	107	56	344	268	70	193	248	202	162	212	280	338	300	Rp 1 1/4	5,6 kg
GAS X3/MCE - D1"1/2-S	20	185	224	107	56	344	292	70	193	248	202	162	212	280	338	443	Rp 1 1/2	8 kg
GAS X4/MCE - D1"-S	20	185	224	125	80	371	274	70	193	248	206	200	218	280	338	323	Rp 1	5,6 kg
GAS X4/MCE - D1"1/4-S	20	185	224	125	80	371	274	70	193	248	206	200	218	280	338	323	Rp 1 1/4	5,6 kg
GAS X4/MCE - D1"1/2-S	20	185	224	125	80	371	298	70	193	248	206	200	218	280	338	467	Rp 1 1/2	8 kg

**TC-TL: see "flame tube length"

BOILER PLATE

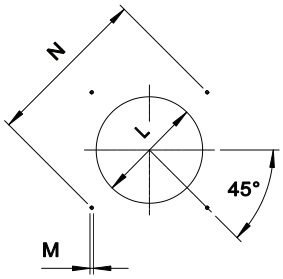

* Suggested dimension of connection between burner and generator.

Fig. 6 Boiler plate

MODEL		L min	L *	L max	M	N min	N *	N max
GAS X2/MCE	mm	100	110	130	M8	130	150	170
GAS X3/MCE	mm	120	130	140	M8	150	170	170
GAS X4/MCE	mm	130	140	160	M10	170	205	226

FLAME TUBE LENGTH

Flame tube length must be selected based on the specifications supplied by boiler manufacturer and, in any case, it must be greater than the thickness of the boiler door included its insulation.
In case of boilers with flame inversion or front flue combustion chambers, it is necessary to insulate the area between the flame tube and front door with refractory material. This protection material must not impede flame tube extraction.

MODEL		TC	TL **
GAS X2/MCE	mm	90	150
GAS X3/MCE	mm	130	250
GAS X4/MCE	mm	160	280

** For different flame lengths, please contact our Technical-Sales Department.

GAS BURNERS TWO STAGES PROGRESSIVE OR MODULATING

PRODUCT SPECIFICATION

SHORT DESCRIPTION

Burners for gas two stages progressive (hi-low flame) or modulating (PID fully modulating) if equipped with addition of optional modulation kit and probe.

DETAILED SPECIFICATION

Burner for gas two stages progressive (hi-low flame) or modulating (PID fully modulating) if equipped with addition of optional modulation kit and probe; composed by:

- Fan at high pressurisation;
- Combustion head with adjustment at high performance and elevated flame stability equipped with inox steel blast tube and steel flame disc;
- Protection cover with noise reduction plate;
- Flange and insulating gasket for fixing at boiler;
- Single phase power supply;
- Safety air pressure switch to stop the burner in lock-out in case of failed or anomalous fan operation;
- Gas train completely assembled and tested; complete of one-block valve A class (1st stage slow opening + safety), minimum gas pressure switch and filter stabilizer;
- Ionisation probe for flame detection;
- IP 40 electric protection level;
- Spherical gas valve servo-controlled; progressive start and free way passage with total opening;
- Servomotor for air shutter and for the spherical gas valve;
- Set up for the additional specific kit that transforms burner operation as modulating i.e. the modulating kit allows to supply any power between the minimun and the maximum value based on instantaneous loading request.

CONFORMING TO:

- CE rules;
- 2014/30/UE Directive E.M.C.;
- 2014/35/UE Directive L.V.;
- 2006/42/CE - 2006/42/EG - 2006/42/EC Directive M.D.;
- GAS 2016/426/UE Regulation;
- Reference rules: EN676 (gas) – EN 746-2 (industrial thermoprocessing equipment).

STANDARD EQUIPMENT

- Isomart gasket;
- Flange with insulating gasket;
- Burner nameplate;
- Warranty;
- Instruction handbook for installation, use and maintenance.

OPTIONAL

- Power modulating kits for temperatures;
- Power modulating kits for pressures;
- Temperature probe 0°C-400°C (PT 100 a 0° C);
- Temperature probe 0°C-1200°C (K probe);
- Pressure probe 0-3 bar, 0-6 bar. 0-16 bar, 0-20 bar, 0-30 bar;
- Antivibration couplings;
- Handle gas taps.

Gtksnab
Оборудование для жизни

Мы ценим каждого клиента и предлагаем широкий ассортимент продукции. Оборудование соответствует всем директивам безопасности и имеет необходимые лицензии. Быстрая доставка по всей России и СНГ. Самовывоз со склада в Москве. Квалифицированные специалисты всегда готовы проконсультировать и помочь подобрать нужные запчасти. Доверьтесь нашему многолетнему опыту и надежности поставок! Интернет-магазин "Gtksnab".

Остались вопросы?
Нужно подобрать или заказать деталь?

Email
order@gtksnab.ru

Телефон
+7 (495)131-57-49

Whatsapp
+7(985) 991-80-53

Telegram
@gtksnab

Сайт
gtksnab.ru