SIEMENS

7806

ISO 9001

SQN9..., front
(covers removed)

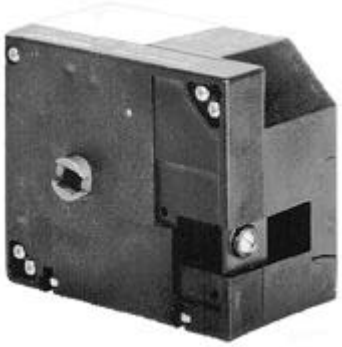

SQN9..., rear
(covers fitted)

Damper Actuators SQN9...

for air dampers of oil or gas burners

Reversible electromotoric actuators with torques from 0.8 to 2.4 Nm.

- **Run times from 4 to 24 seconds**
- **Geartrain can be disengaged**
- **Position indication**
- **Easy-to-adjust end and auxiliary switches**

The SQN9... and this Data Sheet are intended for use by OEMs which integrate the damper actuators in their products!

Use

The SQN9... actuators are used to drive the air dampers of small- to medium-capacity oil or gas burners.
Depending on the type of load controller, the SQN9... are used for single-wire, 2-wire, or modulating control (for details, refer to the Data Sheets of the relevant burner controls under «Connection examples»).

Warning notes

To avoid injury to persons, damage to property or the environment, the following warning notes should be observed!

Do not open, interfere with or modify the actuators!

- Before performing any wiring changes in the connection area of the actuator, completely isolate the equipment from the mains supply (all-polar disconnection)
- Ensure protection against electric shock hazard by providing adequate protection for the connection terminals and by securing the cover
- Check to ensure wiring is in an orderly state
- Fall or shock can adversely affect the safety functions. Such actuators may not be put into operation even if they do not exhibit any damage

Mounting notes

- Ensure that the relevant national safety regulations are complied with

Installation notes

- Installation work must be carried out by qualified staff

Commissioning notes

- Commissioning work must be carried out by qualified staff

Norms and standards

Conformity to EEC directives

- Electromagnetic compatibility EMC (immunity)	89 / 336 EEC
- Low-voltage directive	73 / 23 EEC

Service notes

- Maintenance work must be carried out by qualified staff
- Each time an actuator has been replaced, check wiring to ensure it is in an orderly state

Disposal notes

The actuator contains electrical and electronic components and may not be disposed of together with household waste.
Local and currently valid legislation must be observed.

Mechanical design

Housing	-	Made of impact-proof and heat-resistant plastic
Drive motor	-	Reversible and locking-proof synchronous motor
Coupling	-	Drive shaft of geartrain and motor can be manually disengaged
	-	Automatic reset
Adjustment of switching points	-	By means of adjustable cams
	-	Scales beside the cams indicate the angle of the switching points
	-	Cams can be adjusted with the tool provided, or by similar means
Position indication	-	Via scale at the end of the drive shaft and marker on the front
Electrical connections	-	Screw terminals
Geartrain	-	Maintenance-free
Drive shaft	-	Made of sinter metal
	-	Secured to one side of the geartrain
Mounting and fixing	-	The rear of the geartrain is used as a mounting surface, fixing via through-holes
	-	Housing side with fixing holes

Type code

Do not use this type code for ordering. It shall only serve as a general guide for creating type references.

SQN 9 0 . 1 2 0 A 2 7 9 9

Type of drive shaft / customized version

Voltage / frequency:
17 AC 100...110 V; 50...60 Hz
27 AC 220...240 V; 50...60 Hz

Series

Minor differences in circuitry: [1)]
0 Standard version
3 Special internal diagram (S1)
4 Special internal diagram (S3)

Internal diagram:[1)]
0 0 relays, 8 terminals, 5 switches
2 2 relays, 8 terminals, 3 switches (S2)
4 2 relays, 8 terminals, 5 switches (S4)
5 2 relays, 8 terminals, 2 switches (S5)
7 2 relays, 9 terminals, 4 switches (S7)

Run time for 90°:
1 4 s
2 12 s
3 10 s
5 24 s

Direction of rotation (when facing the drive shaft):
0 Counterclockwise
1 Clockwise

Footprint:
9 100 x 86 mm

7806t01e/0303

[1]) S1...S7 refer to chapter «Internal diagram»

Type summary

SQN90...

Internal diagram no.	Function sequence no.	Direction of rotation 1)	Run time at 50 Hz 2) and 90° angular rotation	Nominal / starting torque	AC 220 V –15 % ...AC 240 V +10 % 50...60 Hz	AC 100 V –15 % ...AC 110 V +10 % 50...60 Hz
			s	Nm	Type reference	Type reference
S4	F1	Counter-clockwise	4	0.8	**SQN90.140B2799**	---
S1	F2, F3	Counter-clockwise	12	2.4	**SQN90.203A2799**	---
S3	F2, F3	Counter-clockwise	12	2.4	**SQN90.204A2799**	---
S2	F2, F3	Counter-clockwise	12	2.4	**SQN90.220A2799**	---
S4	F1	Counter-clockwise	12	2.4	**SQN90.240B2799**	---
S5	F4	Counter-clockwise	10	2.0	**SQN90.350A2799**	**SQN90.350A1799**

SQN91...

Internal diagram no.	Function sequence no.	Direction of rotation 1)	Run time at 50 Hz 2) and 90° angular rotation	Nominal / starting torque	AC 220 V –15 % ...AC 240 V +10 % 50...60 Hz	AC 100 V –15 % ...AC 110 V +10 % 50...60 Hz
			s	Nm	Type reference	Type reference
S4	F1	Clockwise	4	0.8	**SQN91.140B2799**	**SQN91.140B1799**
S2	F2, F3	Clockwise	12	0.8	**SQN91.220A2799**	---
S7	F2, F3	Clockwise	24	2.4	**SQN91.570A2793**	---

Other types of actuators are available on request.

Legend

1) Direction of rotation when facing the drive shaft and at 0° start position
2) At 60 Hz frequency, run times are about 17 % shorter

Ordering

When ordering, please give type reference according to «Type summary».

Technical data

General data	Mains voltage	AC 220 V –15 %...AC 240 V +10 % AC 100 V –15 %...AC 110 V +10 %
	Mains frequency	50...60 Hz ±6 %
	Primary fuse (external)	6.3 AT (to be supplied by thirds)
	Safety class	II to VDE 0631
	Drive motor	synchronous motor
	Power consumption	8 VA
	Positioning angle	max. 0...90° ∢
	Mounting position	optional
	Cable connections	screw terminals for 0.5...2.5 mm² cross-sectional area
	Ferrules	suited for the respective stranded wire
	Direction of rotation	refer to «Type summary»
	Torque	refer to «Type summary»
	Run times	refer to «Type summary»
	Coupling	separation of drive shaft and geartrain by means of a pin
	Weight (average)	approx. 550 g

End and auxiliary switches	Number of end switches	2	
	Number of auxiliary switches	max. 3	
	Actuation	via camshaft	
	Switching voltage	AC 24...250 V	
	Perm. load on terminals at cos φ = 0.9:	Peak current	Operating current
	Switching		
	- Under load on, without load off	max. 14 A	2 A
	- Under load on, under load off	max. 7 A	1 A
	Resolution of cam adjustment	infinitely	

Environmental conditions	**Transport**	DIN EN 60 721-3-2
	Climatic conditions	class 2K2
	Mechanical conditions	class 2M2
	Temperature range	-50...+60 °C
	Humidity	< 95 % r.h.
	Operation	DIN EN 60 721-3-3
	Climatic conditions	class 3K5
	Mechanical conditions	class 3M2
	Temperature range	-20...+60 °C
	Humidity	< 95 % r.h.

Condensation, formation of ice and ingress of water are not permitted!

Function

The synchronous motor drives the drive shaft and the camshaft via the geartrain.
The camshaft actuates the end and auxiliary switches.
Using the associated cam, the switching position of each end and auxiliary switch can be adjusted within the working range.
Some of the actuator variants are equipped with electronic switching modules to perform auxiliary functions in connection with the end and auxiliary switches and external devices, such as controllers.

The camshaft has 2 pointers for indicating the direction of rotation.

The pointers are assigned as follows:
- Double pointer → SQN90...
- Single pointer → SQN91...

Internal diagrams

Diagram S1

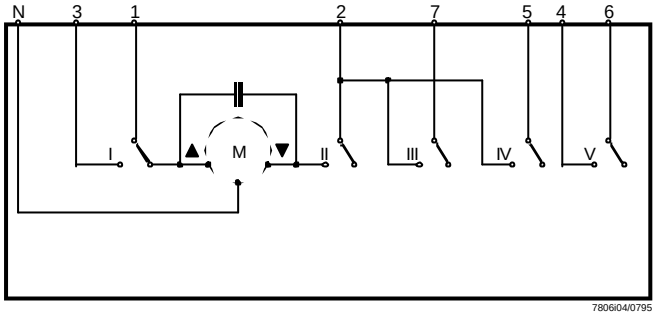

Diagram S2

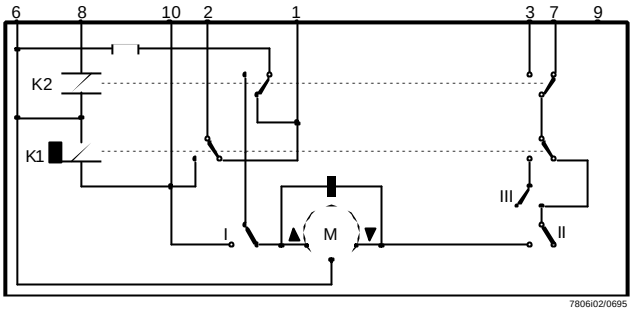

Diagram S3

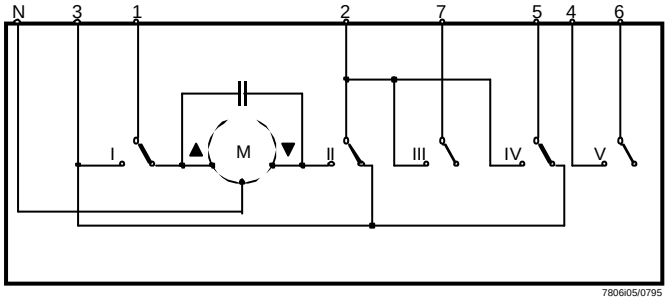

Diagram S4

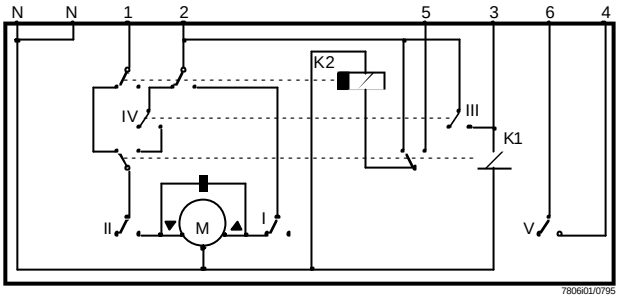

Diagram S5

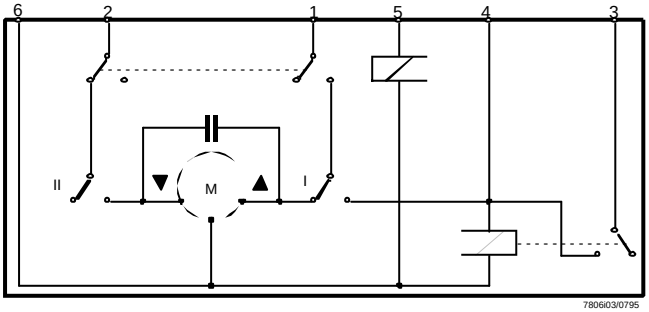

Diagram S7

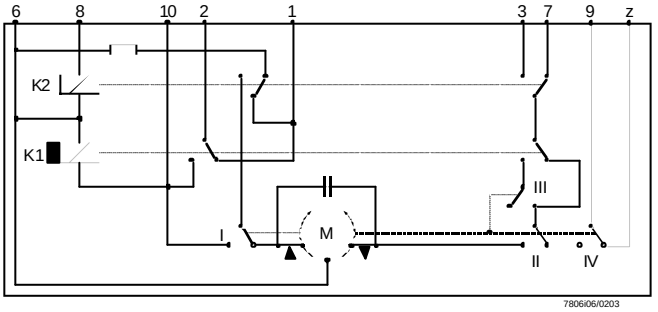

Function sequence

Function sequence F1

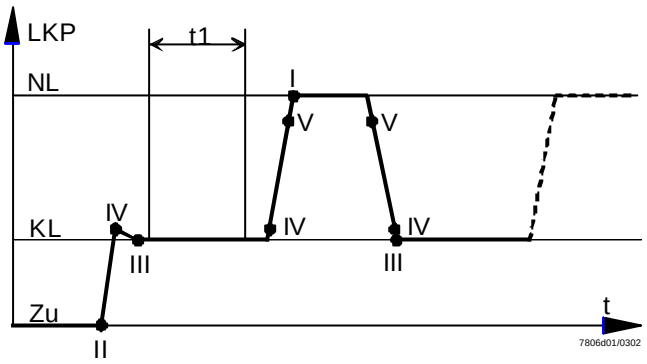

Function sequence F2

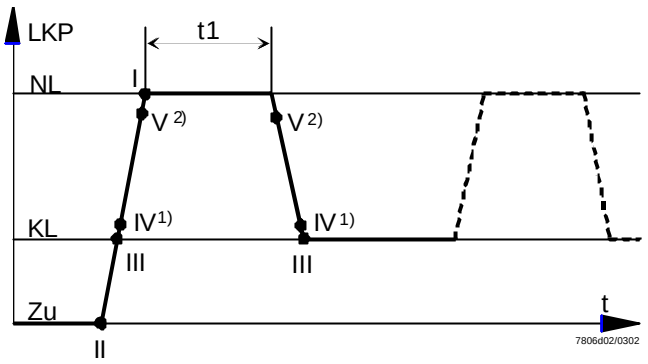

Function sequence F3

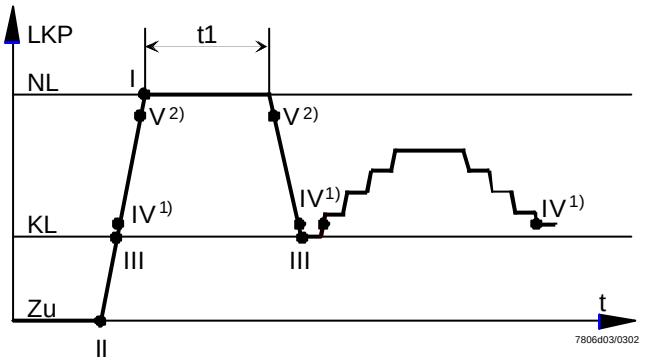

Function sequence F4

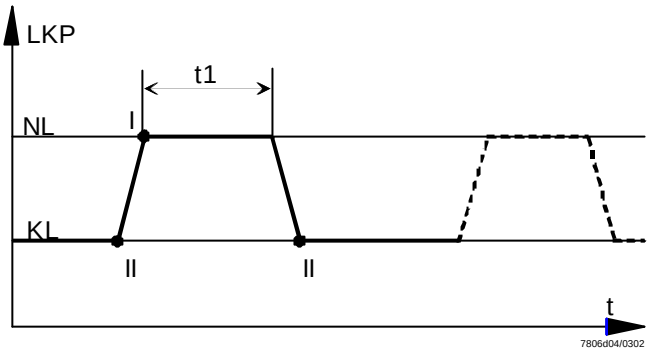

Legend	KL	Low-fire
	LKP	Air damper position
	NL	Nominal load
	t	Time axis
	t1	Burner control's prepurge time
	I...V	Cam switches or auxiliary switches
	1)	Cam switch positions do not apply to internal diagram S2
	2)	Cam switch positions do not apply to internal diagram S2 and S7

Dimensions in mm

Drawing shows actuator with terminal cover removed

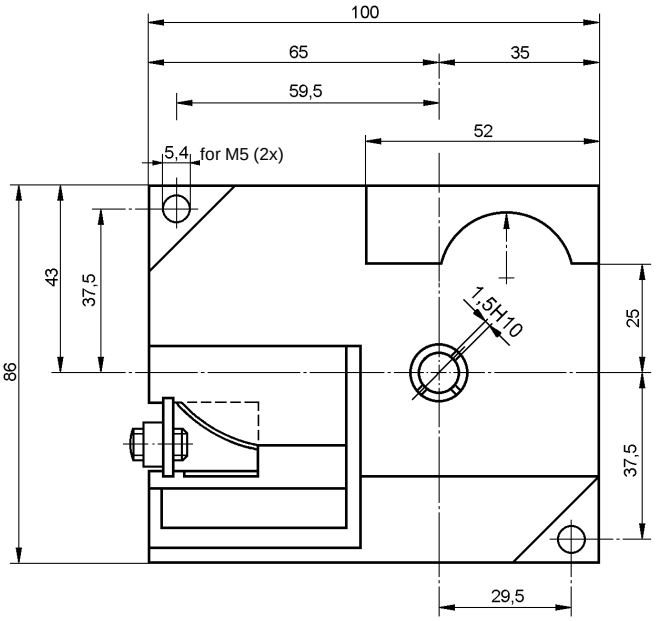

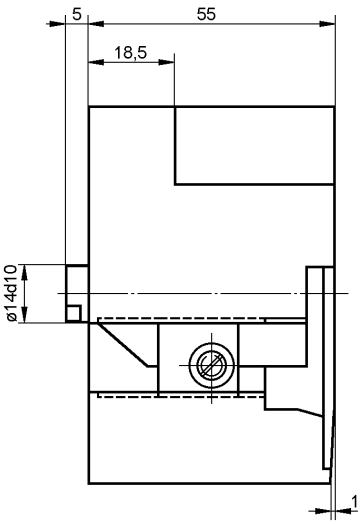

Schematic drawing

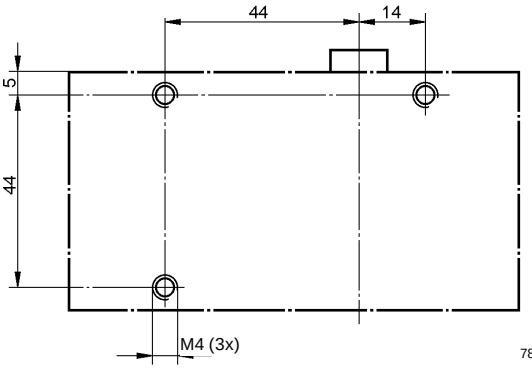

7806m01e/1002

Drive shaft

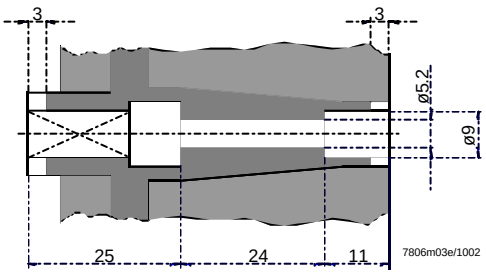

7806m03e/1002

SQN90...

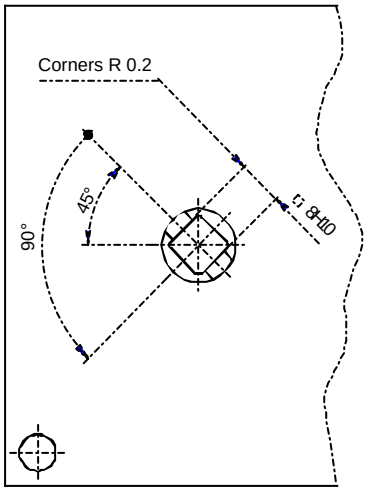

SQN91...

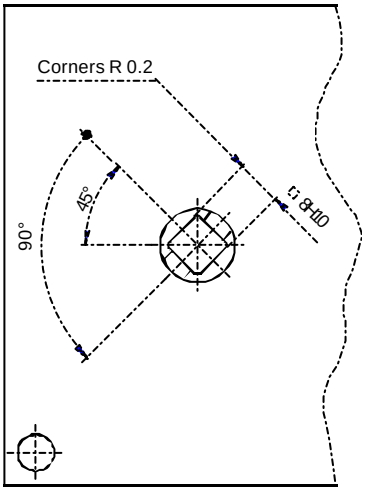

7806m02e/1002

Drive shaft in start position 0°

©2003 Siemens Building Technologies
Subject to change!

Gtksnab
Оборудование для жизни

Мы ценим каждого клиента и предлагаем широкий ассортимент продукции. Оборудование соответствует всем директивам безопасности и имеет необходимые лицензии. Быстрая доставка по всей России и СНГ. Самовывоз со склада в Москве. Квалифицированные специалисты всегда готовы проконсультировать и помочь подобрать нужные запчасти. Доверьтесь нашему многолетнему опыту и надежности поставок! Интернет-магазин "Gtksnab".

Остались вопросы?
Нужно подобрать или заказать деталь?

Email
order@gtksnab.ru

Телефон
+7 (495)131-57-49

Whatsapp
+7(985) 991-80-53

Telegram
@gtksnab

Сайт
gtksnab.ru